Dimensions: With Pressure Relief 3-Port Valve (V1)

AC20C-V1-D

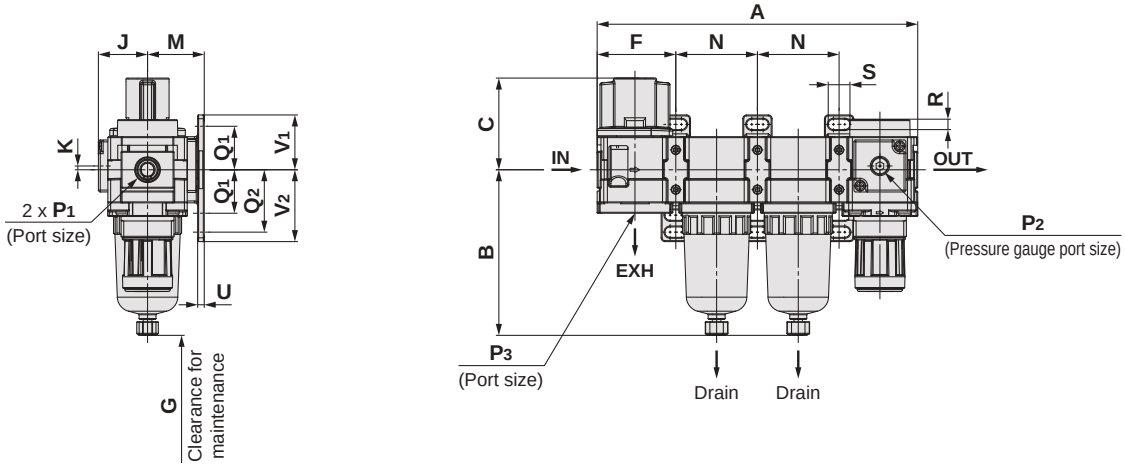

AC30C-V1-D

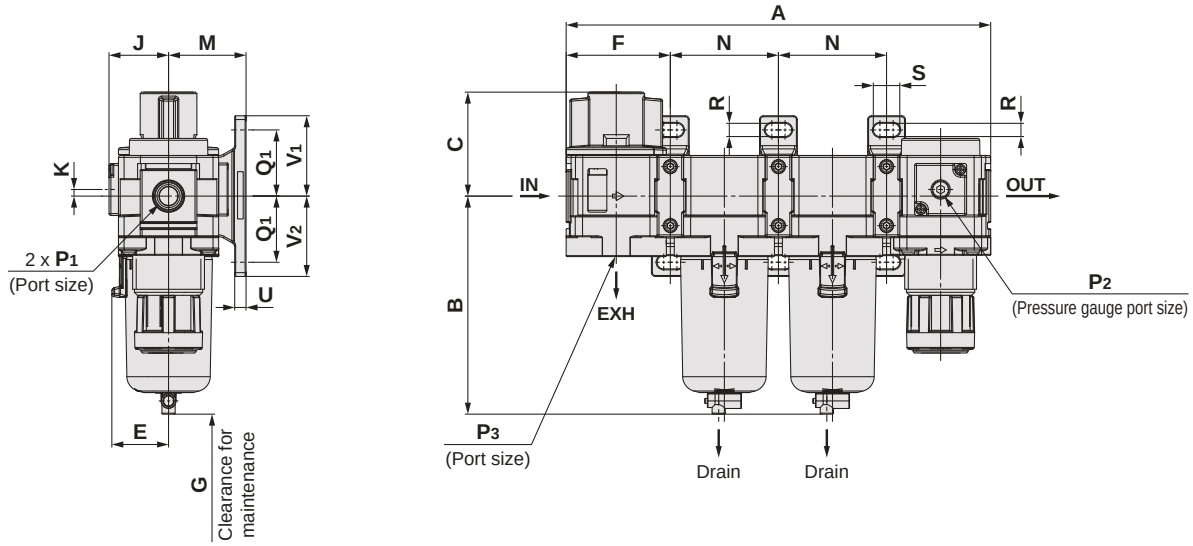

AC40C-V1-D to AC40C-06-V1-D

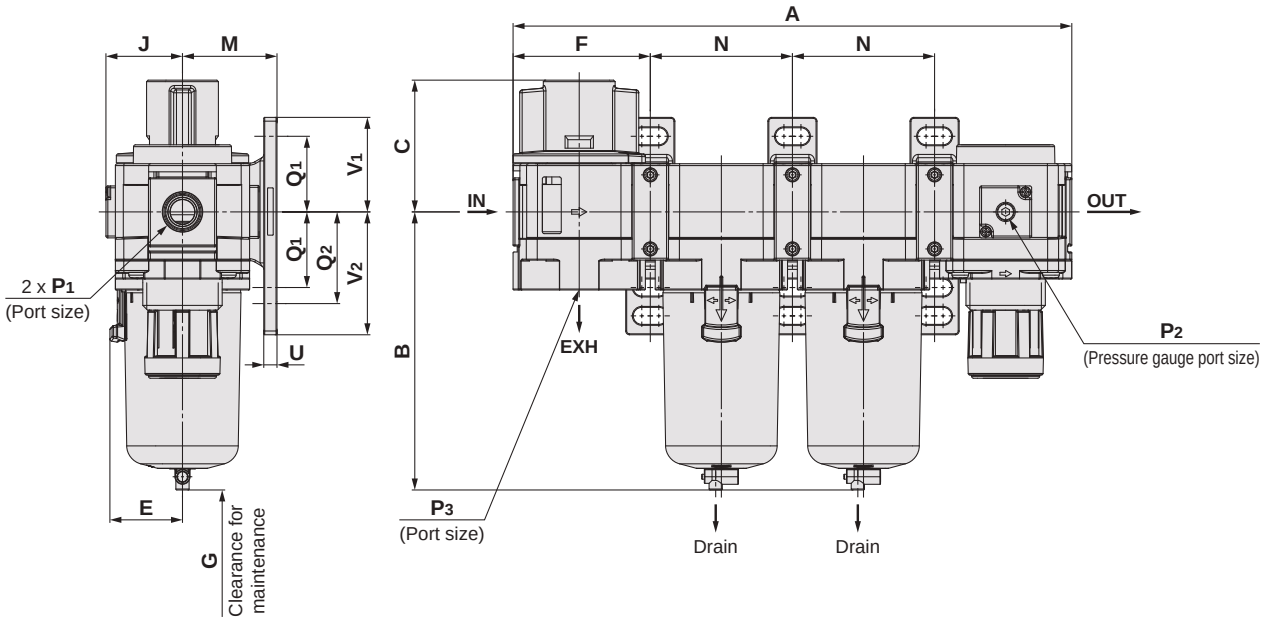

Applicable model	Optional specifications			
	Square embedded type pressure gauge	Digital pressure switch	Round type pressure gauge	Round type pressure gauge (with colour zone)
AC20C-V1-D to AC40C-06-V1-D	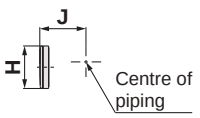	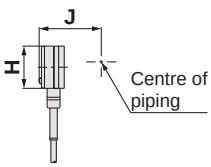	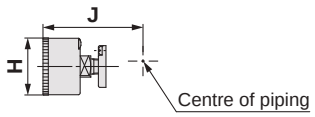	

Applicable model	Optional specifications	Semi-standard					
	With auto drain	PC/PA bowl		Metal bowl		Metal bowl with level gauge	
		Drain cock with barb fitting	With drain guide	With drain cock	With drain guide	With drain cock	With drain guide
AC20C-V1-D	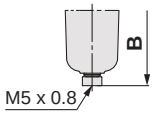		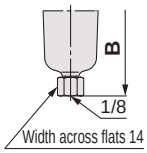	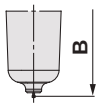	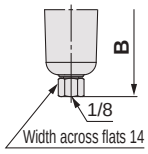		
AC30C-V1-D to AC40C-06-V1-D	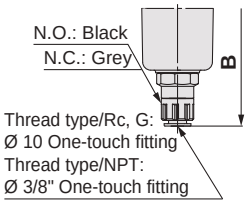	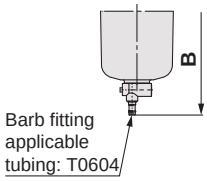	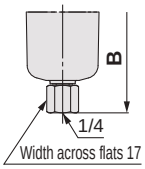	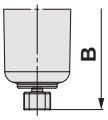	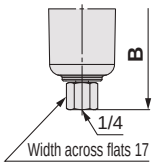	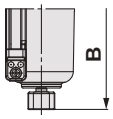	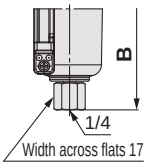

Model	Standard specifications																			
												Bracket mount								
	P_1	P_2	P_3	A	B	C	E	F	G	J	K	M	N	Q_1	Q_2	R	S	U	V_1	V_2
AC20C-V1-D	1/8, 1/4	1/8	1/8	169.6	87.6	48.5	—	41.6	40	26	2	30	43.2	24	33	5.5	11.5	3.5	29	38
AC30C-V1-D	1/4, 3/8	1/8	1/4	224.6	115.4	55	30	55.1	50	31.5	3.5	41	57.2	35	—	7	14	6	42.5	42.5
AC40C-V1-D	1/4, 3/8, 1/2	1/8	3/8	295.6	147.1	69.7	38.4	72.6	75	40.5	—	50	75.2	40	55	9	18	7	50	65
AC40C-06-V1-D	3/4	1/8	1/2	315.6	149.1	71.7	38.4	77.6	75	40.5	—	50	80.2	40	55	9	18	7	50	65

Model	Optional specifications											Semi-standard specifications					
	Square embedded type pressure gauge		Digital pressure switch		Round type pressure gauge		Round type pressure gauge (Semi-standard: Z)		Round type pressure gauge (with colour zone)		With auto drain	PC/PA bowl		Metal bowl		Metal bowl with level gauge	
												With barb fitting	With drain guide	With drain cock	With drain guide	With drain cock	With drain guide
	H	J	H	J	H	J	H	J	H	J	B	B	B	B	B	B	B
AC20C-V1-D	□28	27	□27.8	37.5	Ø 37.5	62.5	Ø 37.5	63.5	Ø 37.5	63.5	104.9	—	91.4	87.4	93.9	—	—
AC30C-V1-D	□28	32.5	□27.8	43	Ø 37.5	68	Ø 37.5	69	Ø 37.5	69	157.1	123.9	122.2	117.8	122.3	137.8	142.3
AC40C-V1-D	□28	41.5	□27.8	52	Ø 42.5	78	Ø 42.5	78	Ø 42.5	78	186.9	155.6	153.9	149.5	154	169.5	174
AC40C-06-V1-D	□28	41.5	□27.8	52	Ø 42.5	73	Ø 42.5	73	Ø 42.5	73	188.9	157.6	155.9	151.5	156	171.5	176

Air Combination

Filter Regulator + Mist Separator

AC20D-D to AC40D-D

Symbol

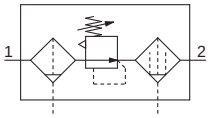

How to Order

AC 30 D – □ 03 DE – □ – □ – D

① ② ③ ④ ⑤ ⑥

Option and Semi-standard Symbol Selection

- Select one each for **a** to **i**.
- When more than one specification is required, indicate in alphanumeric order.

Example) AC30D-F03DE1-16NR-D

				Symbol	Description	① Body size 20	30	40
②	Pipe thread type			—	Rc	●	●	●
				N[*1]	NPT	●	●	●
				F[*2]	G	●	●	●
				+				
③	Port size			**01**	1/8	●	—	—
				02	1/4	●	●	●
				03	3/8	—	●	●
				04	1/2	—	—	●
				06	3/4	—	—	●
				+				
④	Option[*3]	**a**	Float type auto drain	—	Without auto drain	●	●	●
				C[*4]	N.C. (Normally closed) Drain port is closed when pressure is not applied.	●	●	●
				D[*5]	N.O. (Normally open) Drain port is open when pressure is not applied.	—	●	●
				+				
		b	Pressure gauge[*6]	—	Without pressure gauge	●	●	●
				E	Square embedded type pressure gauge (with limit indicator)	●	●	●
				G	Round type pressure gauge (with limit indicator)	●	●	●
				M	Round type pressure gauge (with colour zone)	●	●	●
			Digital pressure switch	**E1**	Output: NPN output, Electrical entry: Wiring bottom entry	●	●	●
				E2	Output: NPN output, Electrical entry: Wiring top entry	●	●	●
				E3	Output: PNP output, Electrical entry: Wiring bottom entry	●	●	●
				E4	Output: PNP output, Electrical entry: Wiring top entry	●	●	●
				+				
⑤	Attachment	**c**	Pressure relief 3-port valve	—	Without attachment	●	●	●
				V	Mounting position: AW + AFM + **V**	●	●	●
				V1[*7]	Mounting position: **V** + AW□K + AFM	●	●	●
				+				
⑥	Semi-standard	**d**	Set pressure[*8]	—	0.05 to 0.85 MPa setting	●	●	●
				1	0.02 to 0.2 MPa setting	●	●	●
				+				
		e	Bowl[*9]	—	Polycarbonate bowl	●	●	●
				2	Metal bowl	●	●	●
				6	Nylon bowl	●	●	●
				8	Metal bowl with level gauge	—	●	●
				C	With bowl guard	●	—[*10]	—[*10]
				6C	With bowl guard (Nylon bowl)	●	—[*11]	—[*11]
				+				
		f	Filter regulator Mist separator drain port[*12]	—	With drain cock	●	●	●
				J[*13]	Drain guide 1/8	●	—	—
					Drain guide 1/4	—	●	●
				W[*14]	Drain cock with barb fitting (for Ø 6 x Ø 4 nylon tube)	—	●	●
				+				
		g	Exhaust mechanism	—	Relieving type	●	●	●
				N	Non-relieving type	●	●	●
				+				
		h	Flow direction	—	Flow direction: Left to right	●	●	●
				R	Flow direction: Right to left	●	●	●

AC30D-D

			Symbol	Description	① Body size 20	30	40
⑥ Semi-standard	i	Unit	—	Unit on product label: MPa, °C, Pressure gauge in SI units: MPa	●	●	●
			Z*15	Unit on product label: psi, °F, Pressure gauge: MPa/psi dual scale	○*17	○*17	○*17
			ZA*16	Digital pressure switch: With unit selection function	△*18	△*18	△*18

*1 Drain guide is NPT1/8 (applicable to the AC20D-D) and NPT1/4 (applicable to the AC30D-D to AC40D-D). The auto drain port comes with a Ø 3/8" One-touch fitting (applicable to the AC30D-D to AC40D-D).
*2 Drain guide is G1/8 (applicable to the AC20D-D) and G1/4 (applicable to the AC30D-D to AC40D-D).
*3 Options G and M are not assembled and supplied loose at the time of shipment.
*4 When pressure is not applied, condensate which does not start the auto drain mechanism will be left in the bowl. Releasing the residual condensate before ending operations for the day is recommended.
*5 If the compressor is small (0.75 kW, discharge flow is less than 100 l/min (ANR)), air leakage from the drain cock may occur during the start of operations. N.C. type is recommended.
*6 When the pressure gauge is attached, a 1.0 MPa pressure gauge will be fitted for standard (0.85 MPa) type. 0.4 MPa pressure gauge for 0.2 MPa type.
*7 The filter regulator is equipped with a backflow function in this configuration. Additionally, when performing maintenance work, make sure that the outlet pressure is released to atmospheric pressure using a pressure gauge.
*8 Pressure can be set higher than the specification pressure in some cases, but use pressure within the specification range.
*9 Refer to chemical data on pages 91 and 129 for chemical resistance of the bowl.
*10 A bowl guard is provided as standard equipment (polycarbonate).
*11 A bowl guard is provided as standard equipment (nylon).
*12 The combination of float type auto drain C and D is not available.
*13 Without a valve function
*14 The combination of metal bowl 2 and 8 is not available.
*15 For the pipe thread type: NPT
This product is for overseas use only according to the New Measurement Act. (The SI unit type is provided for use in Japan.)
Cannot be used with M: Round type pressure gauge (with colour zone). Available by request for special.
The digital pressure switch will be equipped with the unit selection function, setting to psi initially.
*16 For options: E1, E2, E3, E4
This product is for overseas use only according to the New Measurement Act. (The SI unit is provided for use in Japan.)
*17 ○: For the pipe thread type: NPT only
*18 △: Select with options: E1, E2, E3, E4.

Standard Specifications

Model			AC20D-D	AC30D-D	AC40D-D	AC40D-06-D
Component	Filter Regulator	[AW]	AW20-D	AW30-D	AW40-D	AW40-06-D
	Mist Separator	[AFM]	AFM20-D	AFM30-D	AFM40-D	AFM40-06-D
Port size			1/8, 1/4	1/4, 3/8	1/4, 3/8, 1/2	3/4
Pressure gauge port size*1		[AW]	1/8			
Fluid			Air			
Ambient and fluid temperatures*2			–5 to 60 °C (No freezing)			
Proof pressure			1.5 MPa			
Max. operating pressure			1.0 MPa			
Auto drain minimum operating pressure	N.C.	[AW/AFM]	0.1 MPa	0.15 MPa		
	N.O.	[AW/AFM]	—	0.1 MPa		
Set pressure range		[AW]	0.05 to 0.85 MPa			
Max. flow capacity*3		[AFM]	200 l/min (ANR)	450 l/min (ANR)	1100 l/min (ANR)	
Nominal filtration rating*4		[AW]	5 μm			
		[AFM]	0.3 μm (99.9 % filtered particle size)			
Outlet side oil mist concentration*5, *6		[AFM]	Max. 1.0 mg/m³ (≈ 0.8 ppm)			
Compressed air purity class*7			ISO 8573-1:2010 [3 : 4 : 3]*8			
Drain capacity		[AW/AFM]	8 cm³	25 cm³	45 cm³	
Bowl material		[AW/AFM]	Polycarbonate			
Bowl guard		[AW/AFM]	Semi-standard (Steel)	Standard (Polycarbonate)		
Construction		[AW]	Relieving type			
Weight			0.30 kg	0.58 kg	1.12 kg	1.21 kg

*1 Pressure gauge connection threads are not available for F.R.L. unit with a square embedded type pressure gauge or with a digital pressure switch.
*2 –5 to 50 °C for the products with the digital pressure switch
*3 Mist separator inlet pressure: 0.7 MPa. Flow at 20 °C, atmospheric pressure, and 65 % of the relative humidity
The maximum flow capacity varies depending on the inlet pressure.
Keep the air flow within the maximum flow capacity to prevent an outflow of lubricant to the outlet side.
*4 For the following conditions in accordance with [Test condition: ISO 8573-4:2001, Test method ISO 12500-3:2009 compliant] in addition to the conditions above
Conditions: When a new element is used, and the flow capacity, inlet pressure, and the amount of solid bodies on the filter inlet side are stable
*5 The outlet side oil mist concentration for the following conditions in accordance with [Test condition: ISO 8573-2:2007, Test method ISO 12500-1:2007 compliant] in addition to the conditions above
Conditions: When a new element is used, the oil mist concentration on the filter inlet side is 10 mg/m³, and the flow capacity, inlet pressure, and the oil mist concentration on the filter inlet side are stable
*6 The bowl seal and other O-rings are slightly lubricated.
*7 The compressed air purity class is indicated based on ISO 8573-1:2010 Compressed air – Part 1: Contaminants and purity classes.
For details on this standard, refer to page 131.
*8 The compressed air quality class on the inlet side is [7 : 4 : 4].

Dimensions

AC20D-D

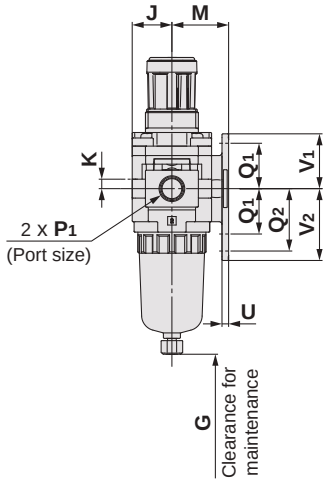

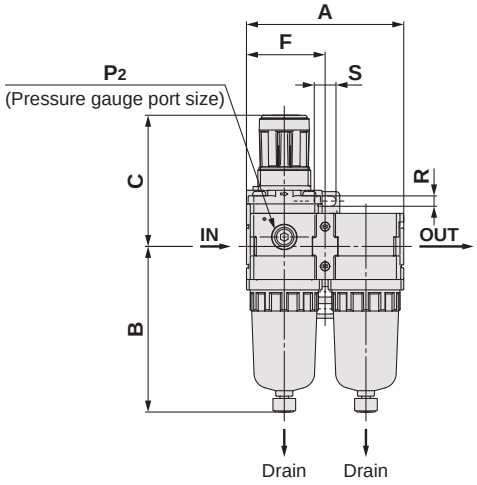

AC30D-D

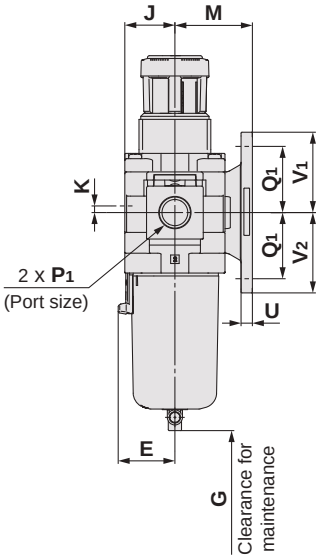

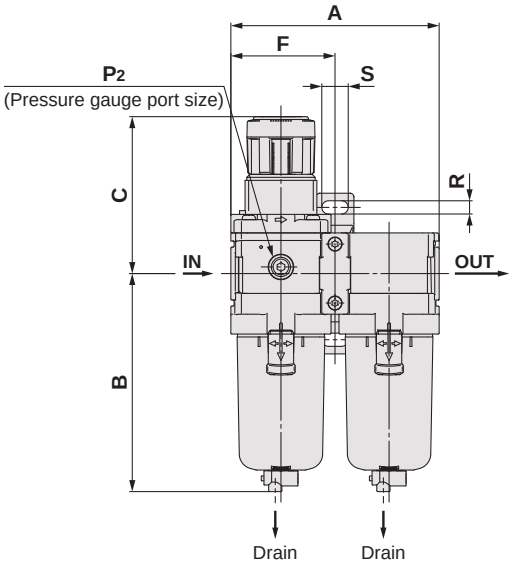

AC40D-D to AC40D-06-D

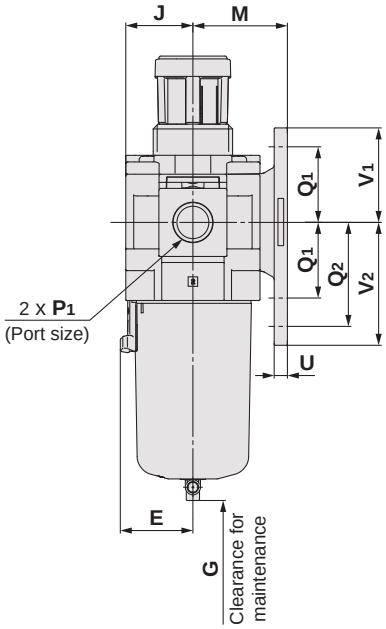

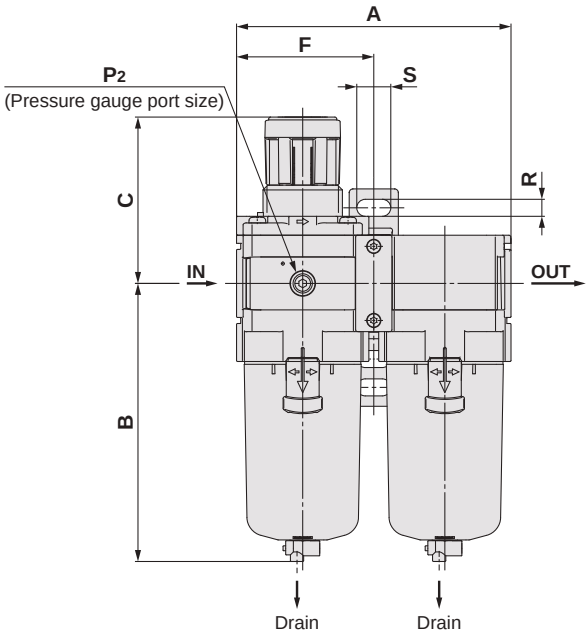

Applicable model	Optional specifications			
	Square embedded type pressure gauge	Digital pressure switch	Round type pressure gauge	Round type pressure gauge (with colour zone)
AC20D-D to AC40D-06-D	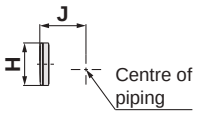	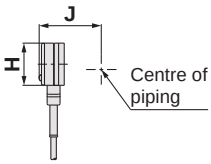	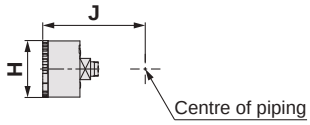	

Applicable model	Optional specifications	Semi-standard					
	With auto drain	PC/PA bowl		Metal bowl		Metal bowl with level gauge	
		Drain cock with barb fitting	With drain guide	With drain cock	With drain guide	With drain cock	With drain guide
AC20D-D	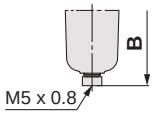		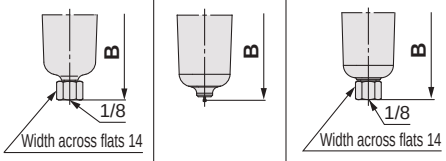				
AC30D-D to AC40D-06-D	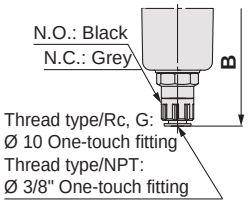	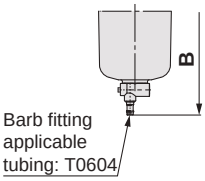	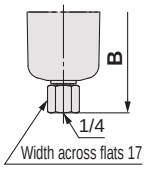	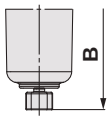	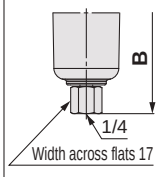	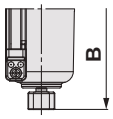	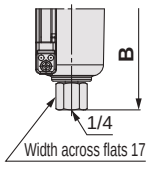

Model	Standard specifications																	
											Bracket mount							
	P_1	P_2	A	B	C	E	F	G	J	K	M	Q_1	Q_2	R	S	U	V_1	V_2
AC20D-D	1/8, 1/4	1/8	83.2	87.6	71.8	—	41.6	45	21	5	30	24	33	5.5	11.5	3.5	29	38
AC30D-D	1/4, 3/8	1/8	110.2	115.3	86.5	30	55.1	55	26.5	3.5	41	35	—	7	14	6	42.5	42.5
AC40D-D	1/4, 3/8, 1/2	1/8	145.2	147.1	91.5	38.4	72.6	80	35.5	—	50	40	55	9	18	7	50	65
AC40D-06-D	3/4	1/8	155.2	149.1	93	38.4	77.6	80	35.5	—	50	40	55	9	18	7	50	65

Model	Optional specifications											Semi-standard specifications					
	Square embedded type pressure gauge		Digital pressure switch		Round type pressure gauge		Round type pressure gauge (Semi-standard: Z)		Round type pressure gauge (with colour zone)		With auto drain	PC/PA bowl		Metal bowl		Metal bowl with level gauge	
												With barb fitting	With drain guide	With drain cock	With drain guide	With drain cock	With drain guide
	H	J	H	J	H	J	H	J	H	J	B	B	B	B	B	B	B
AC20D-D	□28	27	□27.8	37.5	Ø 37.5	57.5	Ø 37.5	58.5	Ø 37.5	58.5	104.9	—	91.4	87.4	93.9	—	—
AC30D-D	□28	32.5	□27.8	43	Ø 37.5	63	Ø 37.5	64	Ø 37.5	64	157.1	123.9	122.2	117.8	122.3	137.8	142.3
AC40D-D	□28	41.5	□27.8	52	Ø 42.5	73	Ø 42.5	73	Ø 42.5	73	186.9	155.6	153.9	149.5	154	169.5	174
AC40D-06-D	□28	41.5	□27.8	52	Ø 42.5	73	Ø 42.5	73	Ø 42.5	73	188.9	157.6	155.9	151.5	156	171.5	176

Dimensions: With Pressure Relief 3-Port Valve (V)

AC20D-V-D

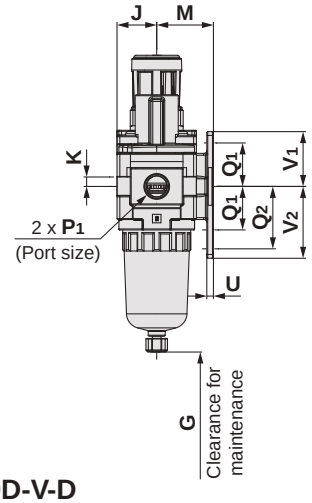

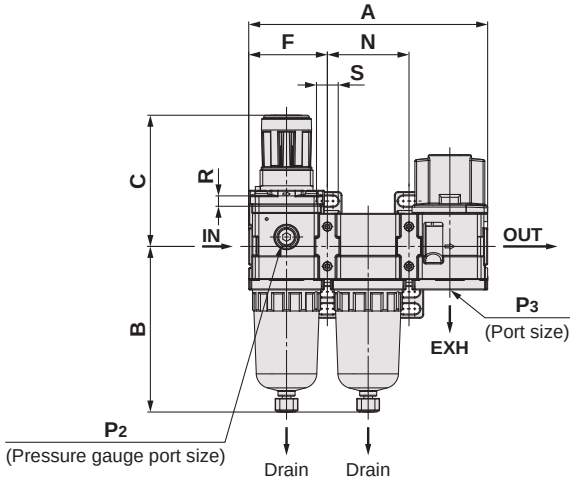

AC30D-V-D

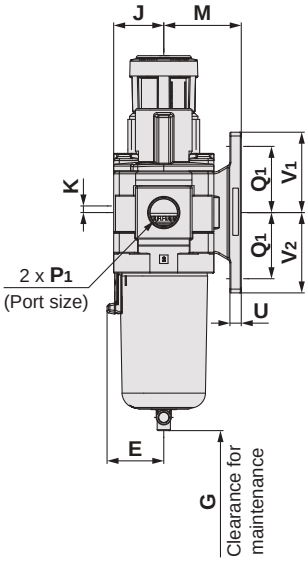

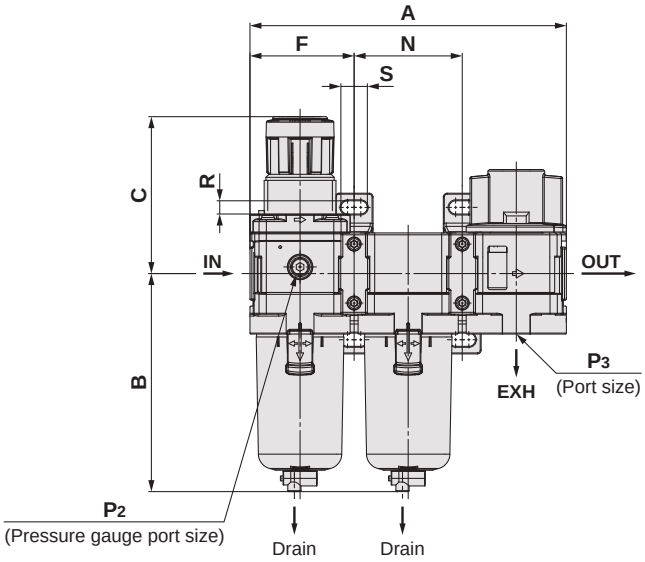

AC40D-V-D to AC40D-06-V-D

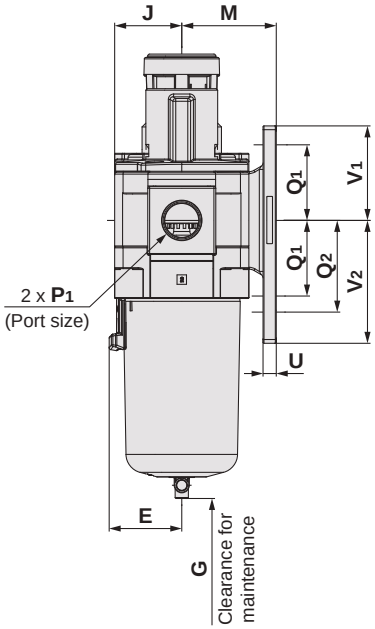

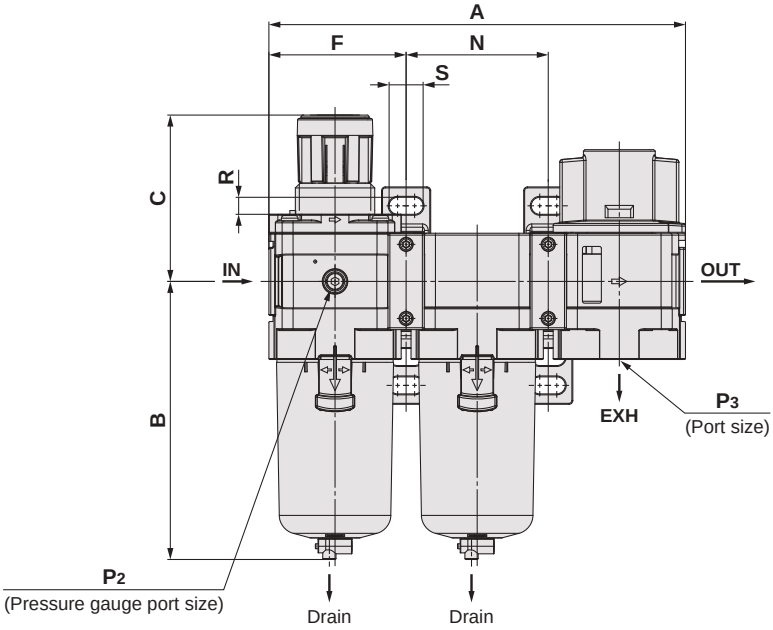

Applicable model	Optional specifications			
	Square embedded type pressure gauge	Digital pressure switch	Round type pressure gauge	Round type pressure gauge (with colour zone)
AC20D-V-D to AC40D-06-V-D	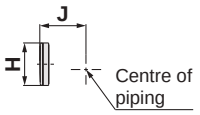	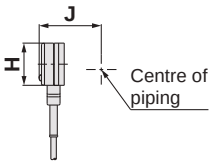	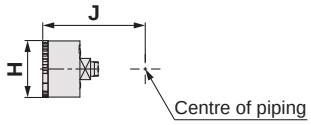	

Applicable model	Optional specifications	Semi-standard					
	With auto drain	PC/PA bowl		Metal bowl		Metal bowl with level gauge	
		Drain cock with barb fitting	With drain guide	With drain cock	With drain guide	With drain cock	With drain guide
AC20D-V-D	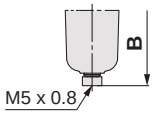		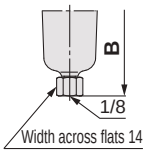	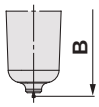	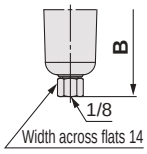		
AC30D-V-D to AC40D-06-V-D	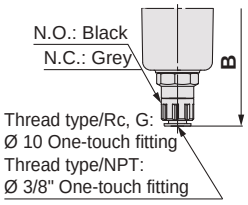	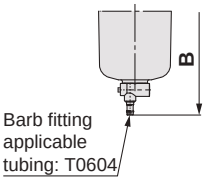	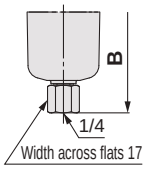	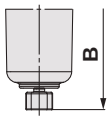	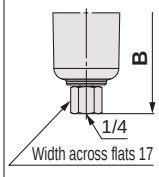	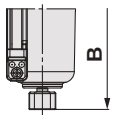	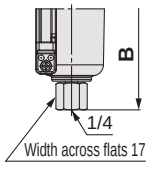

Model	Standard specifications																			
												Bracket mount								
	P_1	P_2	P_3	A	B	C	E	F	G	J	K	M	N	Q_1	Q_2	R	S	U	V_1	V_2
AC20D-V-D	1/8, 1/4	1/8	1/8	126.4	87.6	71.8	—	41.6	40	21	5	30	43.2	24	33	5.5	11.5	3.5	29	38
AC30D-V-D	1/4, 3/8	1/8	1/4	167.4	115.3	86.5	30	55.1	55	26.5	3.5	41	57.2	35	—	7	14	6	42.5	42.5
AC40D-V-D	1/4, 3/8, 1/2	1/8	3/8	220.4	147.1	91.5	38.4	72.6	80	35.5	—	50	75.2	40	55	9	18	7	50	65
AC40D-06-V-D	3/4	1/8	1/2	235.4	149.1	93	38.4	77.6	80	35.5	—	50	80.2	40	55	9	18	7	50	65

Model	Optional specifications											Semi-standard specifications					
	Square embedded type pressure gauge		Digital pressure switch		Round type pressure gauge		Round type pressure gauge (Semi-standard: Z)		Round type pressure gauge (with colour zone)		With auto drain	PC/PA bowl		Metal bowl		Metal bowl with level gauge	
												With barb fitting	With drain guide	With drain cock	With drain guide	With drain cock	With drain guide
	H	J	H	J	H	J	H	J	H	J	B	B	B	B	B	B	B
AC20D-V-D	□28	27	□27.8	37.5	Ø 37.5	57.5	Ø 37.5	58.5	Ø 37.5	58.5	104.9	—	91.4	87.4	93.9	—	—
AC30D-V-D	□28	32.5	□27.8	43	Ø 37.5	63	Ø 37.5	64	Ø 37.5	64	157.1	123.9	122.2	117.8	122.3	137.8	142.3
AC40D-V-D	□28	41.5	□27.8	52	Ø 42.5	73	Ø 42.5	73	Ø 42.5	73	186.9	155.6	153.9	149.5	154	169.5	174
AC40D-06-V-D	□28	41.5	□27.8	52	Ø 42.5	73	Ø 42.5	73	Ø 42.5	73	188.9	157.6	155.9	151.5	156	171.5	176

Dimensions: With Pressure Relief 3-Port Valve (V1)

AC20D-V1-D

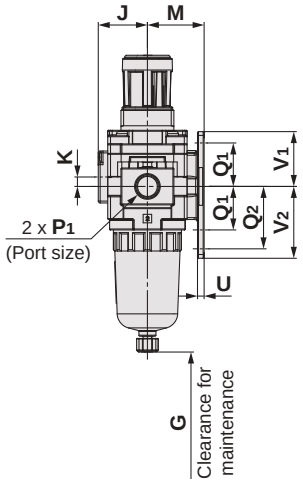

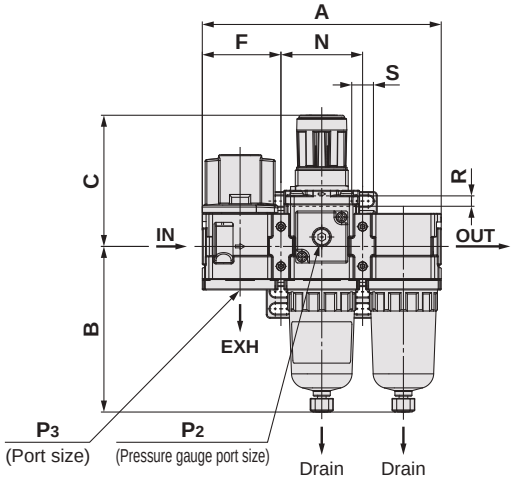

AC30D-V1-D

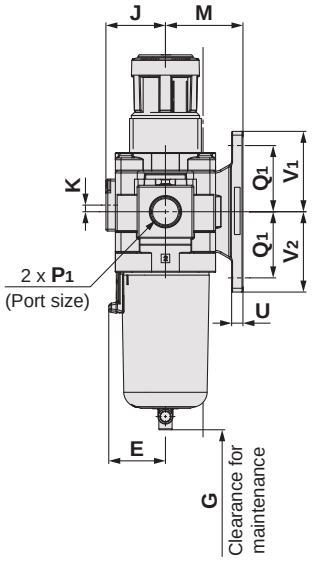

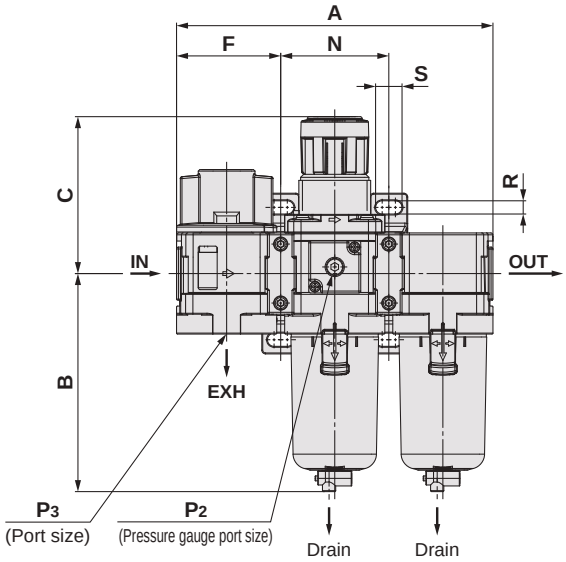

AC40D-V1-D to AC40D-06-V1-D

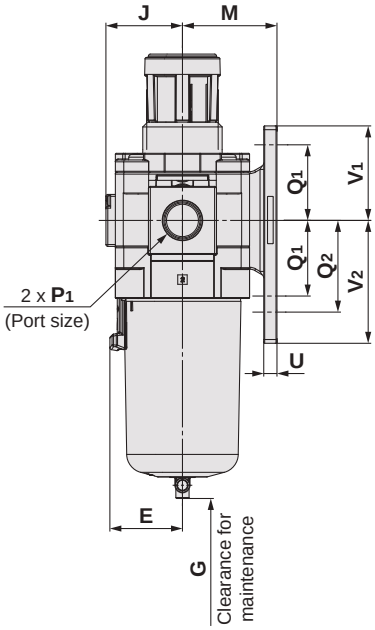

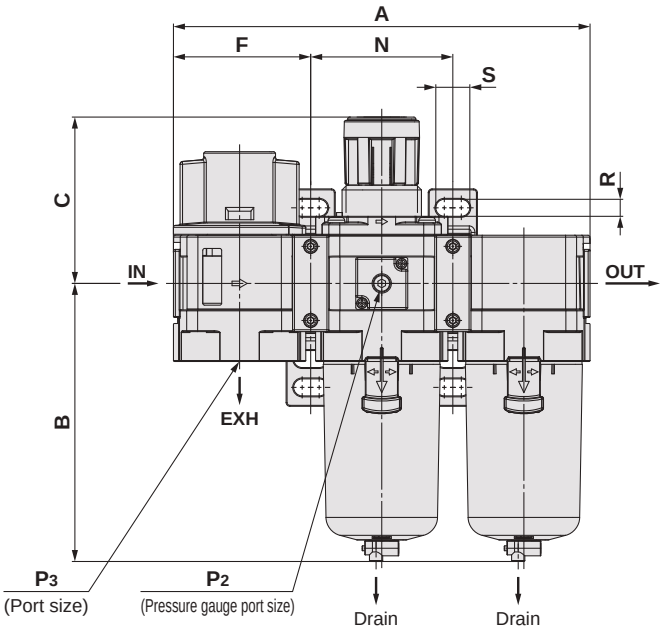

Applicable model	Optional specifications			
	Square embedded type pressure gauge	Digital pressure switch	Round type pressure gauge	Round type pressure gauge (with colour zone)
AC20D-V1-D to AC40D-06-V1-D	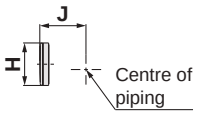	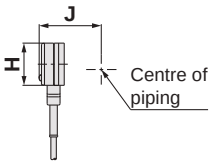	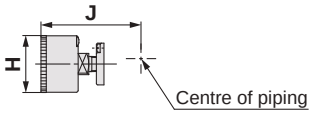	

Applicable model	Optional specifications	Semi-standard					
	With auto drain	PC/PA bowl		Metal bowl		Metal bowl with level gauge	
		Drain cock with barb fitting	With drain guide	With drain cock	With drain guide	With drain cock	With drain guide
AC20D-V1-D	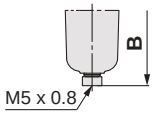		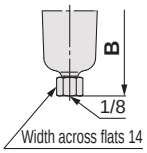	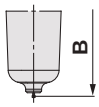	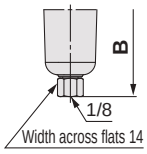		
AC30D-V1-D to AC40D-06-V1-D	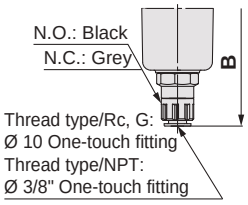	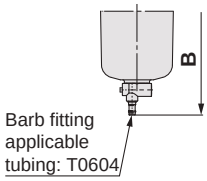	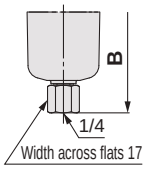	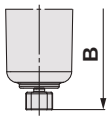	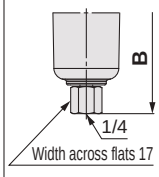	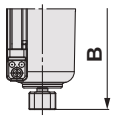	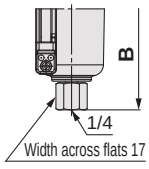

Model	Standard specifications																			
												Bracket mount								
	P_1	P_2	P_3	A	B	C	E	F	G	J	K	M	N	Q_1	Q_2	R	S	U	V_1	V_2
AC20D-V1-D	1/8, 1/4	1/8	1/8	126.4	87.6	71.8	—	41.6	40	26	5	30	43.2	24	33	5.5	11.5	3.5	29	38
AC30D-V1-D	1/4, 3/8	1/8	1/4	167.4	115.3	86.5	30	55.1	55	31.5	3.5	41	57.2	35	—	7	14	6	42.5	42.5
AC40D-V1-D	1/4, 3/8, 1/2	1/8	3/8	220.4	147.1	91.5	38.4	72.6	80	40.5	—	50	75.2	40	55	9	18	7	50	65
AC40D-06-V1-D	3/4	1/8	1/2	235.4	149.1	93	38.4	77.6	80	40.5	—	50	80.2	40	55	9	18	7	50	65

Model	Optional specifications											Semi-standard specifications					
	Square embedded type pressure gauge		Digital pressure switch		Round type pressure gauge		Round type pressure gauge (Semi-standard: Z)		Round type pressure gauge (with colour zone)		With auto drain	PC/PA bowl		Metal bowl		Metal bowl with level gauge	
												With barb fitting	With drain guide	With drain cock	With drain guide	With drain cock	With drain guide
	H	J	H	J	H	J	H	J	H	J	B	B	B	B	B	B	B
AC20D-V1-D	□28	27	□27.8	37.5	Ø 37.5	62.5	Ø 37.5	63.5	Ø 37.5	63.5	104.9	—	91.4	87.4	93.9	—	—
AC30D-V1-D	□28	32.5	□27.8	43	Ø 37.5	68	Ø 37.5	69	Ø 37.5	69	157.1	123.9	122.2	117.8	122.3	137.8	142.3
AC40D-V1-D	□28	41.5	□27.8	52	Ø 42.5	78	Ø 42.5	78	Ø 42.5	78	186.9	155.6	153.9	149.5	154	169.5	174
AC40D-06-V1-D	□28	41.5	□27.8	52	Ø 42.5	73	Ø 42.5	73	Ø 42.5	73	188.9	157.6	155.9	151.5	156	171.5	176

AC-D Series
Option / Accessory / Attachment Part No. List

Section	Description \ Model			Part no.					
				For AC20-D For AC20A-D For AC20B-D For AC20C-D For AC20D-D	For AC30-D For AC30A-D For AC30B-D For AC30C-D For AC30D-D	For AC40-D For AC40A-D For AC40B-D For AC40C-D For AC40D-D	For AC40-06-D For AC40A-06-D For AC40B-06-D For AC40C-06-D For AC40D-06-D	For AC50-D For AC50A-D For AC50B-D — —	For AC60-D For AC60A-D For AC60B-D — —
Option	Pressure gauge*1	Round type	Standard	G36-10-□01		G46-10-□01			
			0.02 to 0.2 MPa setting	G36-4-□01		G46-4-□01			
		Round type (with colour zone)	Standard	G36-10-□01-L		G46-10-□01-L			
			0.02 to 0.2 MPa setting	G36-4-□01-L		G46-4-□01-L			
		Square embedded type*2	Standard	GC3-10AS-D [136150A (Pressure gauge cover only)]					
			0.02 to 0.2 MPa setting	GC3-4AS-D [136150A (Pressure gauge cover only)]					
	Digital pressure switch		NPN output, Wiring bottom entry	ISE35-N-25-MLA-X523 [ISE35-N-25-M (Switch body only)]*3					
			NPN output, Wiring top entry	ISE35-R-25-MLA-X523 [ISE35-R-25-M (Switch body only)]*3					
			PNP output, Wiring bottom entry	ISE35-N-65-MLA-X523 [ISE35-N-65-M (Switch body only)]*3					
			PNP output, Wiring top entry	ISE35-R-65-MLA-X523 [ISE35-R-65-M (Switch body only)]*3					
	Float type auto drain*4		N.C.	AD27-D	AD37-D	AD47-D			
			N.O.	—	AD38-D	AD48-D			
Accessory	Spacer		p. 57	Y200-D	Y300-D	Y400-D	Y500-D	Y600-D	
	Spacer with bracket		p. 57	Y200T-D	Y300T-D	Y400T-D	Y500T-D	Y600T-D	
Attachment	Pressure relief 3-port valve*5, *6		p. 58	VHS20-□01-D VHS20-□02-D	VHS30-□02-D VHS30-□03-D	VHS40-□02-D VHS40-□03-D VHS40-□04-D	VHS40-□06-D	VHS50-□06-D VHS50-□10-D	—
	Piping adapter*5, *6		p. 59	E200-□01-D E200-□02-D E200-□03-D	E300-□02-D E300-□03-D E300-□04-D	E400-□02-D E400-□03-D E400-□04-D E400-□06-D	E500-□06-D E500-□10-D	E600-□06-D E600-□10-D E600-□12-D E600-□14-D	
	L-shaped piping adapter*5, *6		p. 60	E200L-□01-D E200L-□02-D	E300L-□01-D E300L-□02-D E300L-□03-D	E400L-□02-D E400L-□03-D E400L-□04-D	E500L-□04-D E500L-□06-D	E600L-□04-D E600L-□06-D E600L-□10-D	
	T-shaped piping adapter*5, *6		p. 61	E200T-□01-D E200T-□02-D	E300T-□01-D E300T-□02-D E300T-□03-D	E400T-□02-D E400T-□03-D E400T-□04-D	E500T-□04-D E500T-□06-D	E600T-□04-D E600T-□06-D E600T-□10-D	
	T-spacer*5, *6	Standard	p. 62	Y210-□01-D Y210-□02-D	Y310-□01-D Y310-□02-D Y310-□03-D	Y410-□02-D Y410-□03-D Y410-□04-D	Y510-□02-D Y510-□03-D Y510-□04-D Y510-□06-D	Y610-□03-D Y610-□04-D Y610-□06-D	
		Slim type		Y210-□01-1-D Y210-□02-1-D	Y310-□01-1-D Y310-□02-1-D	Y410-□02-1-D Y410-□03-1-D	Y510-□02-1-D Y510-□03-1-D	Y610-□03-1-D Y610-□04-1-D	
	Cross spacer*5, *6	Standard	p. 63	Y24-□01-D Y24-□02-D	Y34-□01-D Y34-□02-D Y34-□03-D	Y44-□02-D Y44-□03-D Y44-□04-D	Y54-□02-D Y54-□03-D Y54-□04-D Y54-□06-D	Y64-□03-D Y64-□04-D Y64-□06-D	
		Front and back port selectable type		Y24-□01-1-D Y24-□02-1-D	Y34-□01-1-D Y34-□02-1-D Y34-□03-1-D	Y44-□02-1-D Y44-□03-1-D Y44-□04-1-D	Y54-□03-1-D Y54-□04-1-D Y54-□06-1-D	—	
	Pressure switch*6	Standard	p. 64	IS10M-20-D	IS10M-30-D	IS10M-40-D	IS10M-50-D	IS10M-60-D	
		Slim type		IS10M-20-1-D	IS10M-30-1-D	IS10M-40-1-D	IS10M-50-1-D	IS10M-60-1-D	
	Pressure switch with T-spacer*5, *6		p. 65	IS10T-20-□01-D IS10T-20-□02-D	IS10T-30-□01-D IS10T-30-□02-D IS10T-30-□03-D	IS10T-40-□02-D IS10T-40-□03-D IS10T-40-□04-D	IS10T-50-□02-D IS10T-50-□03-D IS10T-50-□04-D IS10T-50-□06-D	IS10T-60-□03-D IS10T-60-□04-D IS10T-60-□06-D	
	Pressure switch with L-shaped piping adapter*5, *6		p. 66	IS10L-20-□01-D IS10L-20-□02-D	IS10L-30-□01-D IS10L-30-□02-D IS10L-30-□03-D	IS10L-40-□02-D IS10L-40-□03-D IS10L-40-□04-D	IS10L-50-□04-D IS10L-50-□06-D	IS10L-60-□04-D IS10L-60-□06-D IS10L-60-□10-D	
	Pressure switch with piping adapter*5, *6		p. 67	IS10E-20-□01-D IS10E-20-□02-D IS10E-20-□03-D	IS10E-30-□02-D IS10E-30-□03-D IS10E-30-□04-D	IS10E-40-□02-D IS10E-40-□03-D IS10E-40-□04-D IS10E-40-□06-D	IS10E-50-□06-D IS10E-50-□10-D	IS10E-60-□06-D IS10E-60-□10-D IS10E-60-□12-D IS10E-60-□14-D	
	Right angle adapter*6		p. 68	E210T-D	E310T-D	E410T-D	—	—	—
	Reducing adapter*6		p. 68	E310R-D	E310R-D E410R-D	E410R-D	—	—	—
	Cross adapter*5, *6		p. 69	Y24M-□02-D	Y34M-□03-D	Y44M-□04-D	—	—	—
	End plate*6		p. 70	E200E-D	E300E-D	E400E-D	—	—	—

*1 □ in part numbers for a round type pressure gauge indicates a pipe thread type. No indication is necessary for R; however, indicate N for NPT. Please contact SMC regarding the connection thread NPT and pressure gauge supply for psi unit specifications.
*2 Including one O-ring and 2 mounting screws
*3 Lead wire with connector (2 m), adapter, lock pin, O-ring (1 pc.), mounting screws (2 pcs.) are attached. [ ]: Switch body only
Regarding how to order the digital pressure switch, refer to page 130.
*4 Minimum operating pressure: N.O. type– 0 . 1 MPa; N.C. type– 0 . 1 MPa (AD27-D) and 0.15 MPa (AD37-D/AD47-D). Please contact SMC separately for psi and °F unit display specifications.
*5 □ in attachment part numbers indicates a pipe thread type. No indication is necessary for Rc thread; however, indicate N for NPT thread, and F for G thread.
*6 Separate spacers are required for modular units.

Accessories (Spacer / Spacer with Bracket)

Spacer / Spacer with Bracket

Y 300 □ – D

① ②

	Symbol	Description	① Body size [Applicable AC size]				
			200 [AC20]	300 [AC30]	400 [AC40]	500 [AC40-06]	600 [AC50/AC60]
② Bracket	—	Spacer	●	●	●	●	●
	T	Spacer with bracket	●	●	●	●	●

Spacer (Y□-D)

Spacer with bracket (Y□T-D)

Standard Specifications

Fluid	Air
Ambient and fluid temperatures	–5 to 60 °C (No freezing)
Proof pressure	1.5 MPa
Max. operating pressure	1.0 MPa

Replacement Parts

Description	Material	Part no.				
		Y200-D Y200T-D	Y300-D Y300T-D	Y400-D Y400T-D	Y500-D Y500T-D	Y600-D Y600T-D
Seal	HNBR	Y220P-050S	Y320P-050S	Y420P-050S	Y520P-050S	Y620P-050S

Dimensions

Spacer

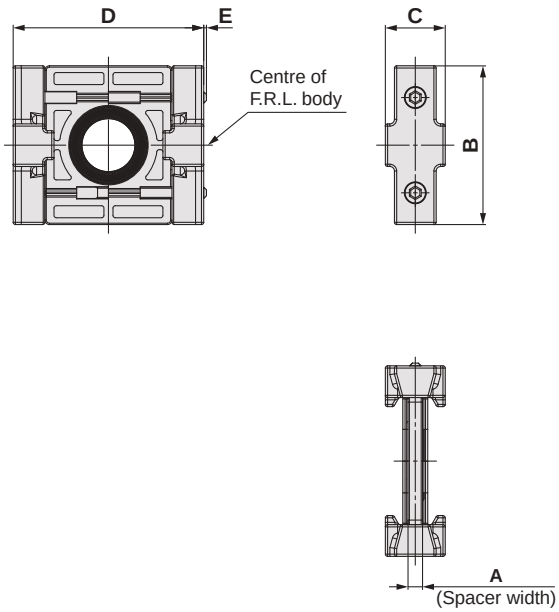

Spacer with bracket

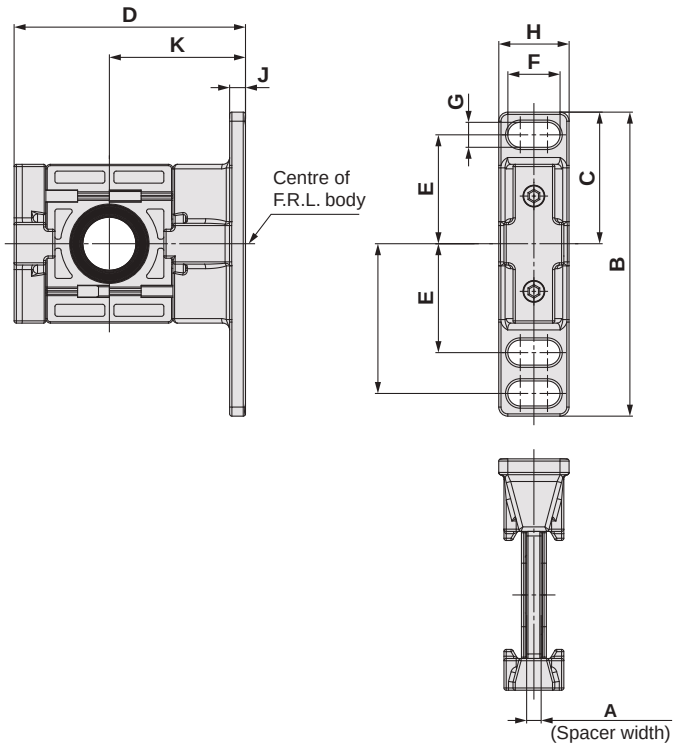

Model	A	B	C	D	E	L	Applicable size
Y200-D	3.2	35	13.2	42	0.6	2	**AC20-D**
Y300-D	4.2	43	16.2	53	—	3	**AC30-D**
Y400-D	5.2	51	19.2	71	—	3	**AC40-D**
Y500-D	5.2	54	21.2	71	—	3	**AC40-06-D**
Y600-D	6.2	64	27.2	90	—	4	**AC50-D AC60-D**

Model	A	B	C	D	E	EE	F	G	H	J	K	L	Applicable size
Y200T-D	3.2	67	29	51	24	33	11.5	5.5	15.5	3.5	30	2	**AC20-D**
Y300T-D	4.2	85	42.5	67.5	35	—	14	7	20	6	41	3	**AC30-D**
Y400T-D	5.2	115	50	85.5	40	55	18	9	26	7	50	3	**AC40-D**
Y500T-D	5.2	115	50	85.5	40	55	18	9	26	7	50	3	**AC40-06-D**
Y600T-D	6.2	140	60	115	50	70	20	11	31.2	8	70	4	**AC50-D AC60-D**

AC-D Series
Attachments

Semi-standard Symbol Selection

· Select one each for **a** and **b**.
· When more than one specification is required, indicate in alphabetical order.
Example) VHS30-N03-RZ-D

Pressure Relief 3-Port Valve: (V, V1)

· By using a pressure relief 3-port valve, pressure left in the line can be easily exhausted.

VHS 30 – □ 03 – □ – D
① ② ③ ④

Symbol

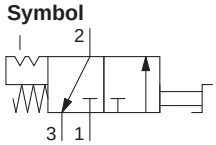

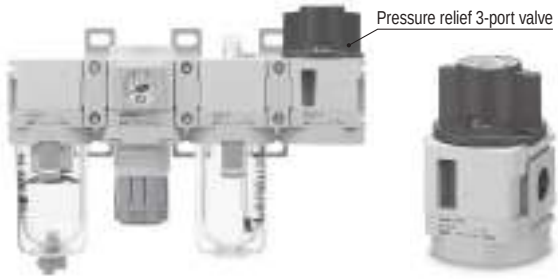

		Symbol	Description	① Body size [Applicable AC size]				
				20 [AC20]	**30** [AC30]	**40** [AC40]	**40** [AC40-06]	**50** [AC50/AC60]*4
②	Pipe thread type	—	Rc*1	●	●	●	●	●
		N	NPT	●	●	●	●	●
		F	G	●	●	●	●	●
		+						
③	Port size	**01**	1/8	●	—	—	—	—
		02	1/4	●	●	●	—	—
		03	3/8	—	●	●	—	—
		04	1/2	—	—	●	—	—
		06	3/4	—	—	—	●	●
		10	1	—	—	—	—	●
		+						
④ Semi-standard	**a** Flow direction	—	Flow direction: Left to right	●	●	●	●	●
		R	Flow direction: Right to left	●	●	●	●	●
		+						
	b Unit	—	Unit on product label: MPa	●	●	●	●	●
		Z*2	Unit on product label: psi	○*3	○*3	○*3	○*3	○*3

*1 The pipe thread type for the EXH port is G.
*2 For the pipe thread type: NPT only. This product is for overseas use only according to the New Measurement Act. (The SI unit type is provided for use in Japan.)
*3 ○: For the pipe thread type: NPT only
*4 The VHS50 can be connected to the AC60.

Standard Specifications

Fluid	Air
Ambient and fluid temperatures	–5 to 60 °C (No freezing)
Proof pressure	1.5 MPa
Max. operating pressure	1.0 MPa

Flow Rate Characteristics

Model	Port size		Flow rate characteristics					
			IN → OUT			OUT → EXH		
	IN, OUT	EXH	C ($dm^3/s\cdot bar$)	b	Cv	C ($dm^3/s\cdot bar$)	b	Cv
VHS20	1/8	1/8	4.0	0.41	1.1	3.7	0.42	1.1
	1/4		5.8	0.31	1.4	3.8	0.42	1.1
VHS30	1/4	1/4	8.8	0.44	2.4	8.0	0.46	2.3
	3/8		14.1	0.28	3.5	7.8	0.46	2.2
VHS40	1/4	3/8	9.5	0.49	2.8	13.3	0.47	3.6
	3/8		17.2	0.47	4.8	13.6	0.47	3.7
	1/2		26.7	0.29	6.3	13.4	0.43	3.7
VHS40-06	3/4	1/2	34.0	0.22	7.6	16.1	0.41	4.4
VHS50	3/4	1/2	45.0	0.26	10.6	23.0	0.49	6.4
	1		53.3	0.36	13.5	22.8	0.49	6.3

Dimensions

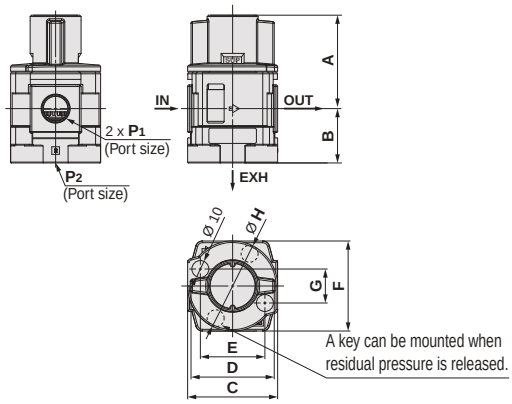

Model	P1	P2	A	B	C	D	Applicable size
VHS20-D	1/8, 1/4	1/8	48.5	23	40	37	**AC20-D**
VHS30-D	1/4, 3/8	1/4	55	32	53	49	**AC30-D**
VHS40-D	1/4, 3/8, 1/2	3/8	69.7	41.3	70	63	**AC40-D**
VHS40-06-D	3/4	1/2	71.7	43.3	75	63	**AC40-06-D**
VHS50-D	3/4, 1	1/2	86.5	44.5	90	80	**AC50-D/AC60-D**

Model	E	F	G	H	Applicable size
VHS20-D	28	42	17.5	40	**AC20-D**
VHS30-D	38	53	20	53	**AC30-D**
VHS40-D	52	71	29	70	**AC40-D**
VHS40-06-D	52	71	29	70	**AC40-06-D**
VHS50-D	72	90	33	90	**AC50-D/AC60-D**

Caution on Mounting

· Use an air filter on the inlet side for operating protection.
· When mounting a silencer, etc., on the EXH port, refer to the operation manual.

Piping Adapter: 1/8, 1/4, 3/8, 1/2, 3/4, 1, 1 1/4, 1 1/2

· Using on the inlet side or the outlet side of F.R.L. units makes it easier to perform maintenance, as the component can be installed/removed without removing the piping.

E 300 – □ 03 – D

① ② ③

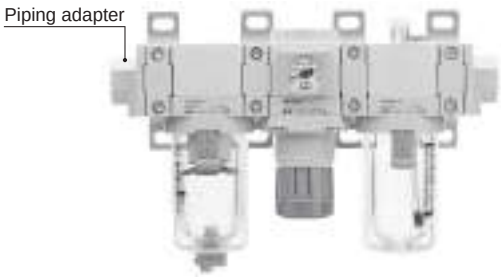

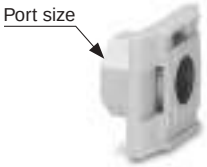

		Symbol	Description	① Body size [Applicable AC size] 200 [AC20]	300 [AC30]	400 [AC40]	500 [AC40-06]	600 [AC50, AC60]
②	Pipe thread type	—	Rc	●	●	●	●	●
		N	NPT	●	●	●	●	●
		F	G	●	●	●	●	●
		+						
③	Port size	01	1/8	●	—	—	—	—
		02	1/4	●	●	●	—	—
		03	3/8	●	●	●	—	—
		04	1/2	—	●	●	—	—
		06	3/4	—	—	●	●	●
		10	1	—	—	—	●	●
		12	1 1/4	—	—	—	—	●
		14	1 1/2	—	—	—	—	●

Standard Specifications

Fluid	Air
Ambient and fluid temperatures	–5 to 60 °C (No freezing)
Proof pressure	1.5 MPa
Max. operating pressure	1.0 MPa

Dimensions

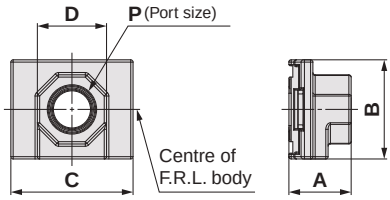

Model	P	A	B	C	D	Applicable AC size
E200-D	1/8, 1/4, 3/8	24	35	42	24	**AC20-D**
E300-D	1/4, 3/8, 1/2	27	43	53	30	**AC30-D**
E400-D	1/4, 3/8, 1/2, 3/4	30	51	71	36	**AC40-D**
E500-D	3/4	31	54	71	36	**AC40-06-D**
	1				46	
E600-D	3/4, 1	39	64	90	46	**AC50-D**
	1 1/4, 1 1/2	42			63	**AC60-D**

Caution on Mounting

Pipe threads are not provided on the face which connects with the other components. For use, a separate spacer (or spacer with bracket) is required.

L-Shaped Piping Adapter: 1/8, 1/4, 3/8, 1/2, 3/4, 1

· Upward/downward piping is possible on the inlet side and the outlet side of F.R.L. units.
· Ideal for space-saving and reducing piping labour
· Using on the inlet side or the outlet side of F.R.L. units makes it easier to perform maintenance, as the component can be installed/removed without removing the piping.

E 300 L – ☐ 03 – D
① ② ③

		Symbol	Description	① Body size [Applicable AC size] 200 [AC20]	300 [AC30]	400 [AC40]	500 [AC40-06]	600 [AC50, AC60]
②	Pipe thread type	—	Rc	●	●	●	●	●
		N	NPT	●	●	●	●	●
		F	G	●	●	●	●	●
		+						
③	Port size	01	1/8	●	●	—	—	—
		02	1/4	●	●	●	—	—
		03	3/8	—	●	●	—	—
		04	1/2	—	—	●	●	●
		06	3/4	—	—	—	●	●
		10	1	—	—	—	—	●

Standard Specifications

Fluid	Air
Ambient and fluid temperatures	–5 to 60 °C (No freezing)
Proof pressure	1.5 MPa
Max. operating pressure	1.0 MPa

Dimensions

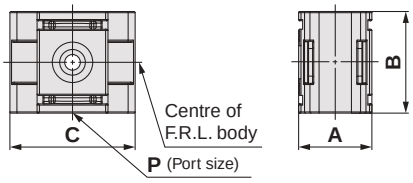

Model	P	A	B	C	Applicable AC size
E200L-D	1/8, 1/4	28	35	42	**AC20-D**
E300L-D	1/8, 1/4, 3/8	31	43	53	**AC30-D**
E400L-D	1/4, 3/8, 1/2	39	51	71	**AC40-D**
E500L-D	1/2, 3/4	47	54	71	**AC40-06-D**
E600L-D	1/2, 3/4, 1	62	64	90	**AC50-D** **AC60-D**

Caution on Mounting

Pipe threads are not provided on the face which connects with the other components. For use, a separate spacer (or spacer with bracket) is required.

T-Shaped Piping Adapter: 1/8, 1/4, 3/8, 1/2, 3/4, 1

· Both upward and downward piping are possible on the inlet and outlet sides of F.R.L. units.
· Ideal for space-saving and reducing piping labour
· Using on the inlet side or the outlet side of F.R.L. units makes it easier to perform maintenance, as the component can be installed/removed without removing the piping.

E 300 T – ☐ 03 – D

① ② ③

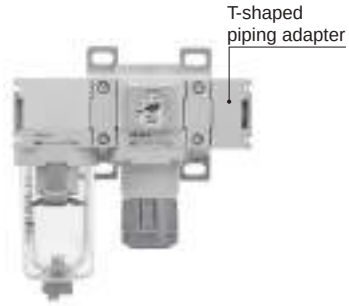

		Symbol	Description	① Body size [Applicable AC size] 200 [AC20]	300 [AC30]	400 [AC40]	500 [AC40-06]	600 [AC50, AC60]
②	Pipe thread type	—	Rc	●	●	●	●	●
		N	NPT	●	●	●	●	●
		F	G	●	●	●	●	●
		+						
③	Port size	01	1/8	●	●	—	—	—
		02	1/4	●	●	●	—	—
		03	3/8	—	●	●	—	—
		04	1/2	—	—	●	●	●
		06	3/4	—	—	—	●	●
		10	1	—	—	—	—	●

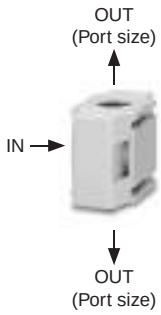

	Port size
IN	—
OUT	③

Standard Specifications

Fluid	Air
Ambient and fluid temperatures	–5 to 60 °C (No freezing)
Proof pressure	1.5 MPa
Max. operating pressure	1.0 MPa

Dimensions

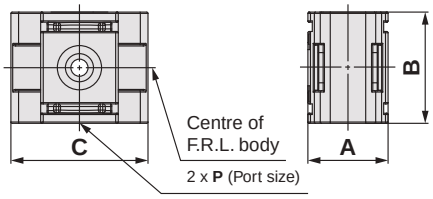

Model	P	A	B	C	Applicable AC size
E200T-D	1/8, 1/4	28	35	42	**AC20-D**
E300T-D	1/8, 1/4, 3/8	31	43	53	**AC30-D**
E400T-D	1/4, 3/8, 1/2	39	51	71	**AC40-D**
E500T-D	1/2, 3/4	47	54	71	**AC40-06-D**
E600T-D	1/2, 3/4, 1	62	64	90	**AC50-D** **AC60-D**

Caution on Mounting

Pipe threads are not provided on the face which connects with the other components. For use, a separate spacer (or spacer with bracket) is required.

T-Spacer: 1/8, 1/4, 3/8, 1/2, 3/4

· Using a T-spacer facilitates the branching of air flow.

Y 310 – □ 03 – □ – D

① ② ③ ④

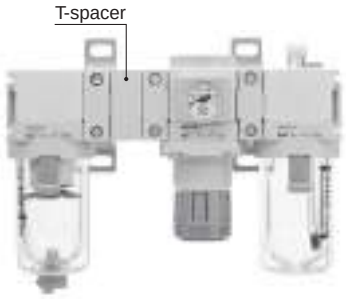

		Symbol	Description	① Body size [Applicable AC size] 210 [AC20]	310 [AC30]	410 [AC40]	510 [AC40-06]	610 [AC50, AC60]
②	Pipe thread type	—	Rc	●	●	●	●	●
		N	NPT	●	●	●	●	●
		F	G	●	●	●	●	●
		+						
③	Port size (OUT①)	01	1/8	●	●	—	—	—
		02	1/4	●	●	●	●	—
		03	3/8	—	○	●	●	●
		04	1/2	—	—	○	○	●
		06	3/4	—	—	—	○	○
		+						
④ Semi-standard	Body type	—	Standard	●	●	●	●	●
		1	Slim	●	●	●	●	●

∗ ○: Only applicable to the standard type body

Body type: Standard (Y□-□□-D)

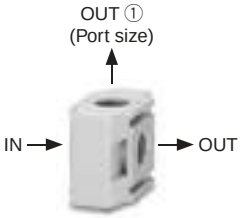

	Port size
IN	—
OUT	—
OUT ①	③

Body type: Slim (Y□-□□-1-D)

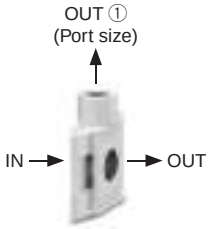

	Port size
IN	—
OUT	—
OUT ①	③

Standard Specifications

Fluid	Air
Ambient and fluid temperatures	–5 to 60 °C (No freezing)
Proof pressure	1.5 MPa
Max. operating pressure	1.0 MPa

Dimensions

Body type: Standard

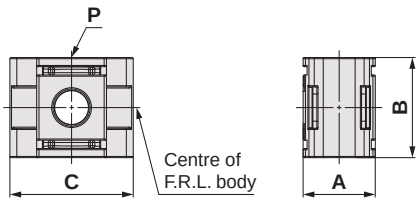

Model	P	A	B	C	Applicable AC size
Y210-D	1/8, 1/4	28	35	42	**AC20-D**
Y310-D	1/8, 1/4, 3/8	31	43	53	**AC30-D**
Y410-D	1/4, 3/8, 1/2	39	51	71	**AC40-D**
Y510-D	1/4, 3/8, 1/2, 3/4	47	54	71	**AC40-06-D**
Y610-D	3/8, 1/2, 3/4	62	64	90	**AC50-D, AC60-D**

Body type: Slim

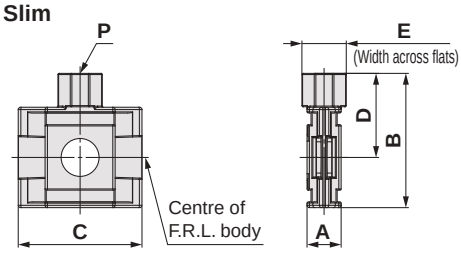

Model	P	A	B	C	D	E	Applicable AC size
Y210-1-D	1/8, 1/4	14.6	48.5	42	31	19	**AC20-D**
Y310-1-D	1/8, 1/4	14.6	57.5	53	36	19	**AC30-D**
Y410-1-D	1/4, 3/8	18.6	67	71	41.5	24	**AC40-D**
Y510-1-D	1/4, 3/8	18.6	70	63	43	24	**AC40-06-D**
Y610-1-D	3/8, 1/2	22	87	90	55	30	**AC50-D, AC60-D**

Caution on Mounting

· Pipe threads are not provided on the face which connects with the other components. For use, a separate spacer (or spacer with bracket) is required.

· The backflow of oil may occur when a spacer is used on the inlet side of the lubricator. Attach a check valve between the lubricator and the product to prevent backflow.

· When the slim body type is to be mounted to a wall using a spacer with bracket, use a spacer on only one side.

Cross Spacer: 1/8, 1/4, 3/8, 1/2, 3/4

· The piping can be branched upward/downward (OUT ①) or forward/backward (OUT ②).

Y 34 – □ 03 – □ – D

① ② ③ ④

		Symbol	Description	① Body size [Applicable AC size] 24 [AC20]	34 [AC30]	44 [AC40]	54 [AC40-06]	64 [AC50, AC60]
②	Pipe thread type	—	Rc	●	●	●	●	●
		N	NPT	●	●	●	●	●
		F	G	●	●	●	●	●
		+						
③	Port size (OUT ①)	01	1/8	●	●	—	—	—
		02	1/4	●	●	●	○	—
		03	3/8	—	●	●	●	○
		04	1/2	—	—	●	●	○
		06	3/4	—	—	—	●	○
		+						
④ Semi-standard	Body type	—	Standard*1	●	●	●	●	●
		1	Front and back port selectable type*2	●	●	●	●	—

*1 The front and back ports are for releasing pressure and only come in size 1/8, irrespective of the ③ port size. The minimum port size is 1.4 mm.
*2 The front and back ports come in the same size as the ③ port size.
*3 "○" indicates that only the standard body type is applicable.

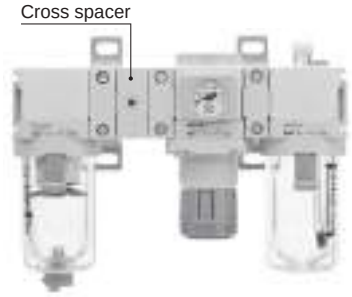

Body type: Standard (Y□-□□-D)

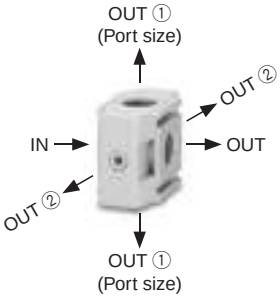

	Port size
IN	—
OUT	—
OUT ①	③
OUT ②	1/8

Body type: Front and back port selectable (Y□-□□-1-D)

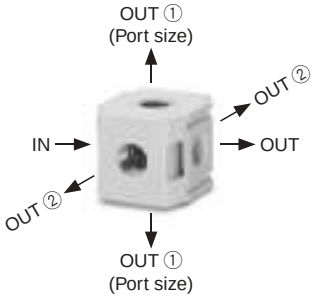

	Port size
IN	—
OUT	—
OUT ①	③
OUT ②	③

Standard Specifications

Fluid	Air
Ambient and fluid temperatures	–5 to 60 °C (No freezing)
Proof pressure	1.5 MPa
Max. operating pressure	1.0 MPa

Dimensions

Body type: Standard

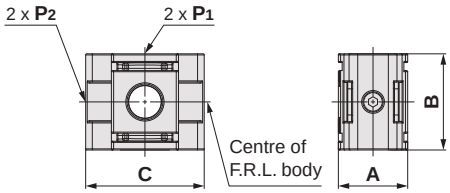

Model	P_1	P_2*1	A	B	C	Applicable AC size
Y24-D	1/8, 1/4	1/8	28	35	42	**AC20-D**
Y34-D	1/8, 1/4, 3/8	1/8	31	43	53	**AC30-D**
Y44-D	1/4, 3/8, 1/2	1/8	39	51	71	**AC40-D**
Y54-D	1/4, 3/8, 1/2, 3/4	1/8	47	54	71	**AC40-06-D**
Y64-D	3/8, 1/2, 3/4	1/8	62	64	90	**AC50-D, AC60-D**

*1 A resin plug is attached to the P_2 port and shipped together with the product.

Body type: Front and back port selectable

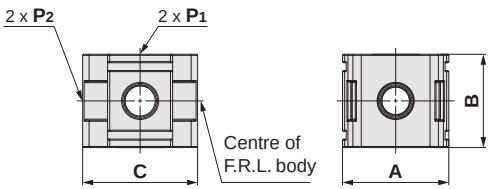

Model	P_1, P_2*1	A	B	C	Applicable AC size
Y24-1-D	1/8, 1/4	40	35	42	**AC20-D**
Y34-1-D	1/8, 1/4, 3/8	49	43	53	**AC30-D**
Y44-1-D	1/4, 3/8, 1/2	60	51	71	**AC40-D**
Y54-1-D	3/8, 1/2, 3/4	72	54	71	**AC40-06-D**

*1 Two hexagon socket head plugs the same size as the P_1 and P_2 ports are shipped together with the product.

Caution on Mounting

· Pipe threads are not provided on the face which connects with the other components. For use, a separate spacer (or spacer with bracket) is required.
· The backflow of oil may occur when a spacer is used on the inlet side of the lubricator. Attach a check valve between the lubricator and the product to prevent backflow.

Semi-standard Symbol Selection

· Select one each for **a** to **d**.
· When more than one specification is required, indicate in alphanumeric order.
Example) IS10M-30-6LP-D

Pressure Switch

· A compact, integrated pressure switch can be easily installed to facilitate the pressure detection of the line.

IS10M – 30 – □ – D

① ②

Symbol

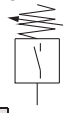

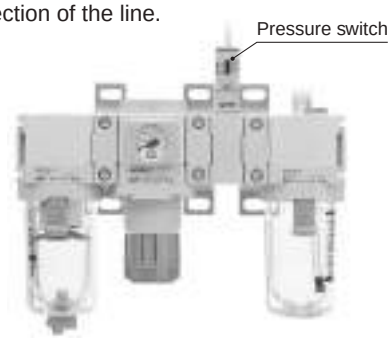

② Semi-standard		Symbol	Description	① Body size [Applicable AC size] 20 [AC20]	30 [AC30]	40 [AC40]	50 [AC40-06]	60 [AC50, AC60]
a	Body type	—	Standard	●	●	●	●	●
		1	Slim	●	●	●	●	●
		+						
b	Set pressure range	—	0.1 to 0.4 MPa	●	●	●	●	●
		6*1	0.1 to 0.6 MPa	○	○	○	○	○
		+						
c	Lead wire length	—	0.5 m	●	●	●	●	●
		L	3 m	●	●	●	●	●
		Z	5 m	●	●	●	●	●
		+						
d	Pressure unit of the scale plate	—	MPa	●	●	●	●	●
		P*2	MPa/psi dual scale	○	○	○	○	○

●: Without restrictions ○: With restrictions (Refer to *1 and *2.)

Body type: Standard (IS10M-□□-D)

Body type: Slim (IS10M-□□-1-D)

*1 The set pressure range for the 6P is 0.2 to 0.6 MPa (30 to 90 psi).
*2 This product is for overseas use only according to the New Measurement Act.
(The SI unit type is provided for use in Japan.)

Standard Specifications

Fluid	Air
Ambient and fluid temperatures	–5 to 60 °C (No freezing)
Proof pressure	1.0 MPa
Max. operating pressure	0.7 MPa
Set pressure range (when OFF)	0.1 to 0.4 MPa
Hysteresis	0.08 MPa or less
Contact point configuration	1a

Switch Characteristics

Max. contact point capacity	2 VA (AC), 2 W (DC)
Operating voltage: AC, DC	100 V or less
Max. operating current	24 VAC, DC or less: 50 mA 48 VAC, DC or less: 40 mA 100 VAC, DC or less: 20 mA

* For detailed specifications of the IS10 series, refer to the IS10 series section on the SMC website: https://www.smc.eu

Dimensions

Body type: Standard

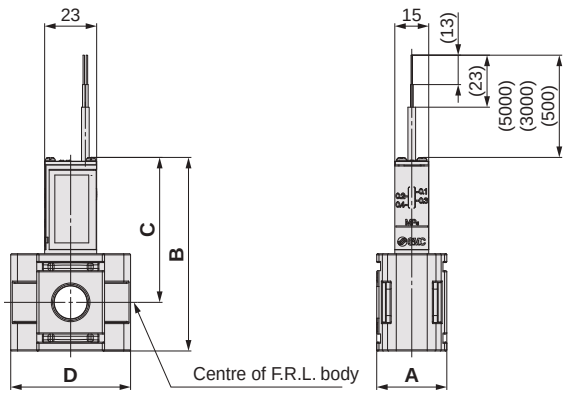

Model	A	B	C	D	Applicable AC size
IS10M-20-D	28	77.6	60.1	42	**AC20-D**
IS10M-30-D	31	85.6	64.1	53	**AC30-D**
IS10M-40-D	39	93.6	68.1	71	**AC40-D**
IS10M-50-D	47	96.6	69.6	71	**AC40-06-D**
IS10M-60-D	62	106.6	74.6	90	**AC50-D, AC60-D**

Body type: Slim

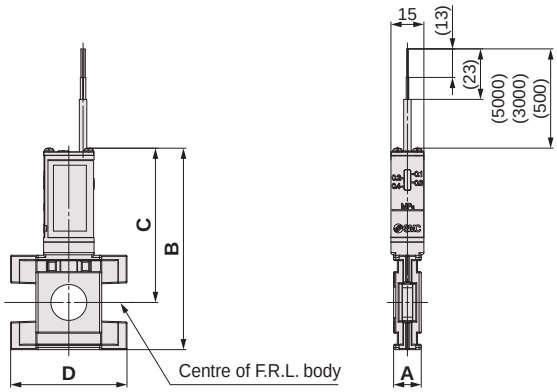

Model	A	B	C	D	Applicable AC size
IS10M-20-1-D	10.6	83.8	66.3	42	**AC20-D**
IS10M-30-1-D	12.6	91.8	70.3	53	**AC30-D**
IS10M-40-1-D	14.6	97.8	72.3	58.6	**AC40-D**
IS10M-50-1-D	16.6	100.8	73.8	59.3	**AC40-06-D**
IS10M-60-1-D	22	110.8	78.8	90	**AC50-D, AC60-D**

Caution on Mounting

· Pipe threads are not provided on the face which connects with the other components. For use, a separate spacer (or spacer with bracket) is required.
· When the slim body type is to be mounted to a wall using a spacer with bracket, use a spacer on only one side.

Semi-standard Symbol Selection

· Select one each for **a** to **c**.
· When more than one specification is required, indicate in alphanumeric order.
Example) IS10T-30-N03-6LP-D

Pressure Switch with T-Spacer

· A compact, integrated pressure switch can be easily installed to facilitate the pressure detection of the line.

IS10T – 30 – □ 03 – □ – D
① ② ③ ④

		Symbol	Description	① Body size [Applicable AC size] 20 [AC20]	30 [AC30]	40 [AC40]	50 [AC40-06]	60 [AC50, AC60]
②	Pipe thread type	—	Rc	●	●	●	●	●
		N	NPT	●	●	●	●	●
		F	G	●	●	●	●	●
		+						
③	Port size (OUT①)	01	1/8	●	●	—	—	—
		02	1/4	●	●	●	●	—
		03	3/8	—	●	●	●	●
		04	1/2	—	—	●	●	●
		06	3/4	—	—	—	●	●
		+						
④ Semi-standard	a Set pressure range	—	0.1 to 0.4 MPa	●	●	●	●	●
		6*1	0.1 to 0.6 MPa	○	○	○	○	○
		+						
	b Lead wire length	—	0.5 m	●	●	●	●	●
		L	3 m	●	●	●	●	●
		Z	5 m	●	●	●	●	●
		+						
	c Pressure unit of the scale plate	—	MPa	●	●	●	●	●
		P*2	MPa/psi dual scale	○	○	○	○	○

●: Without restrictions ○: With restrictions (Refer to *1 and *2.)

*1 The set pressure range for the 6P is 0.2 to 0.6 MPa (30 to 90 psi).
*2 For the pipe thread type: NPT only
This product is for overseas use only according to the New Measurement Act.
(The SI unit type is provided for use in Japan.)

Symbol

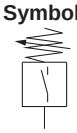

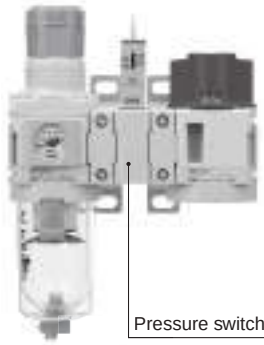

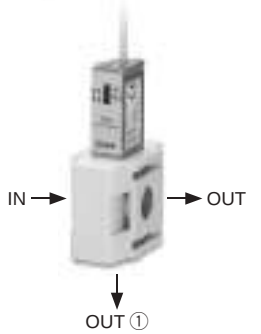

	Port size
IN	—
OUT	—
OUT ①	③

Standard Specifications

Fluid	Air
Ambient and fluid temperatures	–5 to 60 °C (No freezing)
Proof pressure	1.0 MPa
Max. operating pressure	0.7 MPa
Set pressure range (when OFF)	0.1 to 0.4 MPa
Hysteresis	0.08 MPa or less
Contact point configuration	1a

Switch Characteristics

Max. contact point capacity	2 VA (AC), 2 W (DC)
Operating voltage: AC, DC	100 V or less
Max. operating current	24 VAC, DC or less: 50 mA 48 VAC, DC or less: 40 mA 100 VAC, DC or less: 20 mA

* For detailed specifications of the IS10 series, refer to the IS10 series section on the SMC website: https://www.smc.eu

Dimensions

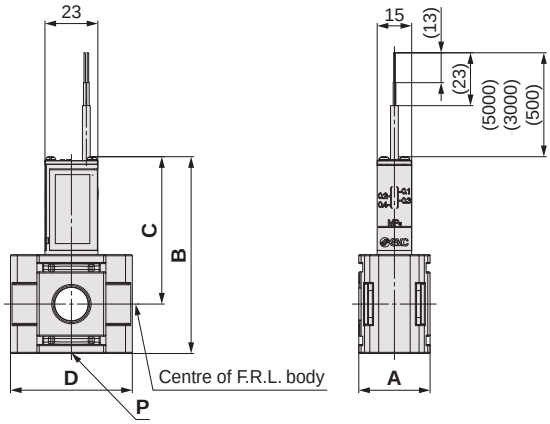

Model	P	A	B	C	D	Applicable AC size
IS10T-20-D	1/8, 1/4	28	77.6	60.1	42	**AC20-D**
IS10T-30-D	1/8, 1/4, 3/8	31	85.6	64.1	53	**AC30-D**
IS10T-40-D	1/4, 3/8, 1/2	39	93.6	68.1	71	**AC40-D**
IS10T-50-D	1/4, 3/8, 1/2, 3/4	47	96.6	69.6	71	**AC40-06-D**
IS10T-60-D	3/8, 1/2, 3/4	62	106.6	74.6	90	**AC50-D, AC60-D**

Caution on Mounting

· Pipe threads are not provided on the face which connects with the other components. For use, a separate spacer (or spacer with bracket) is required.
· The backflow of oil may occur when a spacer is used on the inlet side of the lubricator. Attach a check valve between the lubricator and the product to prevent backflow.

Semi-standard Symbol Selection

· Select one each for **a** to **d**.
· When more than one specification is required, indicate in alphanumeric order.
Example) IS10L-30-N03-6LP-D

Pressure Switch with L-Shaped Piping Adapter

· A compact, integrated pressure switch can be easily installed to facilitate the pressure detection of the line.
· Using on the inlet side or the outlet side of F.R.L. units allows the component to be installed/removed without removing the piping.

IS10L – 30 – □ 03 – □ – D
① ② ③ ④

		Symbol	Description	① Body size [Applicable AC size] 20 [AC20]	30 [AC30]	40 [AC40]	50 [AC40-06]	60 [AC50, AC60]
②	Pipe thread type	—	Rc	●	●	●	●	●
		N	NPT	●	●	●	●	●
		F	G	●	●	●	●	●
③	Port size (OUT)	01	1/8	●	●	—	—	—
		02	1/4	●	●	●	—	—
		03	3/8	—	●	●	—	—
		04	1/2	—	—	●	●	●
		06	3/4	—	—	—	●	●
		10	1	—	—	—	—	●
④ Semi-standard	a Set pressure range	—	0.1 to 0.4 MPa	●	●	●	●	●
		6*1	0.1 to 0.6 MPa	○	○	○	○	○
	b Lead wire length	—	0.5 m	●	●	●	●	●
		L	3 m	●	●	●	●	●
		Z	5 m	●	●	●	●	●
	c Pressure unit of the scale plate	—	MPa	●	●	●	●	●
		P*2	MPa/psi dual scale	○	○	○	○	○
	d Mounting position	—	Right	●	●	●	●	●
		R	Left	●	●	●	●	●

●: Without restrictions ○: With restrictions (Refer to *1 and *2.)

*1 The set pressure range for the 6P is 0.2 to 0.6 MPa (30 to 90 psi).
*2 For the pipe thread type: NPT only
This product is for overseas use only according to the New Measurement Act.
(The SI unit type is provided for use in Japan.)

Symbol

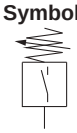

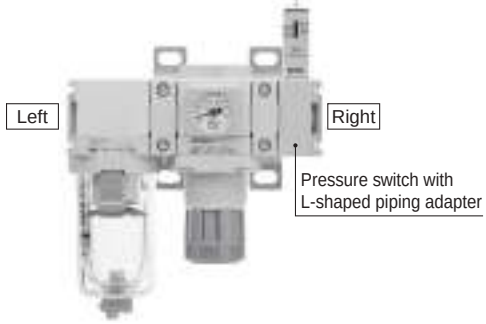

	Port size
IN	—
OUT	③

Standard Specifications

Fluid	Air
Ambient and fluid temperatures	–5 to 60 °C (No freezing)
Proof pressure	1.0 MPa
Max. operating pressure	0.7 MPa
Set pressure range (when OFF)	0.1 to 0.4 MPa
Hysteresis	0.08 MPa or less
Contact point configuration	1a

Switch Characteristics

Max. contact point capacity	2 VA (AC), 2 W (DC)
Operating voltage: AC, DC	100 V or less
Max. operating current	24 VAC, DC or less: 50 mA 48 VAC, DC or less: 40 mA 100 VAC, DC or less: 20 mA

* For detailed specifications of the IS10 series, refer to the IS10 series section on the SMC website: https://www.smc.eu

Dimensions

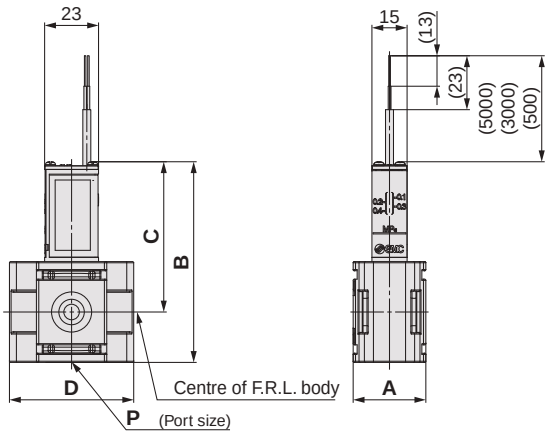

Model	P	A	B	C	D	Applicable AC size
IS10L-20-D	1/8, 1/4	28	77.6	60.1	42	**AC20-D**
IS10L-30-D	1/8, 1/4, 3/8	31	85.6	64.1	53	**AC30-D**
IS10L-40-D	1/4, 3/8, 1/2	39	93.6	68.1	71	**AC40-D**
IS10L-50-D	1/2, 3/4	47	96.6	69.6	71	**AC40-06-D**
IS10L-60-D	1/2, 3/4, 1	62	106.6	74.6	90	**AC50-D, AC60-D**

Caution on Mounting

Pipe threads are not provided on the face which connects with the other components. For use, a separate spacer (or spacer with bracket) is required.

Semi-standard Symbol Selection

· Select one each for **a** to **d**.
· When more than one specification is required, indicate in alphanumeric order.
Example) IS10E-30-N03-6LP-D

Pressure Switch with Piping Adapter

· A compact, integrated pressure switch can be easily installed to facilitate the pressure detection of the line.

IS10E – 30 – □ 03 – □ – D
① ② ③ ④

		Symbol	Description	① Body size [Applicable AC size] 20 [AC20]	30 [AC30]	40 [AC40]	50 [AC40-06]	60 [AC50, AC60]
②	Pipe thread type	—	Rc	●	●	●	●	●
		N	NPT	●	●	●	●	●
		F	G	●	●	●	●	●
		+						
③	Port size (OUT)	01	1/8	●	—	—	—	—
		02	1/4	●	●	●	—	—
		03	3/8	●	●	●	—	—
		04	1/2	—	●	●	—	—
		06	3/4	—	—	●	●	●
		10	1	—	—	—	●	●
		12	1 1/4	—	—	—	—	●
		14	1 1/2	—	—	—	—	●
		+						
④ Semi-standard	a Set pressure range	—	0.1 to 0.4 MPa	●	●	●	●	●
		6*1	0.1 to 0.6 MPa	○	○	○	○	○
		+						
	b Lead wire length	—	0.5 m	●	●	●	●	●
		L	3 m	●	●	●	●	●
		Z	5 m	●	●	●	●	●
		+						
	c Pressure unit of the scale plate	—	MPa	●	●	●	●	●
		P*2	MPa/psi dual scale	○	○	○	○	○
		+						
	d Mounting position	—	Right	●	●	●	●	●
		R	Left	●	●	●	●	●

●: Without restrictions ○: With restrictions (Refer to *1 and *2.)

*1 The set pressure range for the 6P is 0.2 to 0.6 MPa (30 to 90 psi).
*2 For the pipe thread type: NPT only
This product is for overseas use only according to the New Measurement Act.
(The SI unit type is provided for use in Japan.)

Symbol

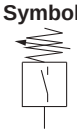

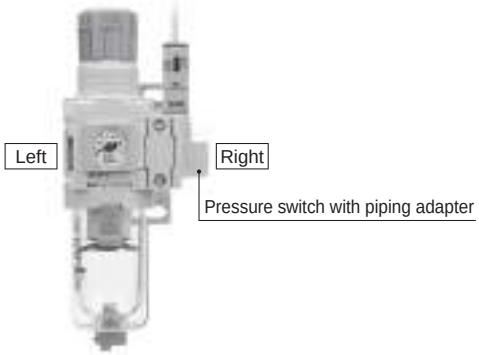

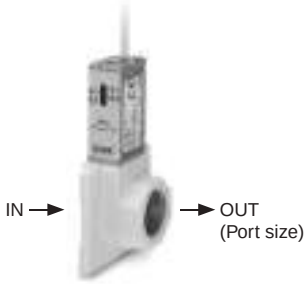

	Port size
IN	—
OUT	③

Standard Specifications

Fluid	Air
Ambient and fluid temperatures	–5 to 60 °C (No freezing)
Proof pressure	1.0 MPa
Max. operating pressure	0.7 MPa
Set pressure range (when OFF)	0.1 to 0.4 MPa
Hysteresis	0.08 MPa or less
Contact point configuration	1a

Switch Characteristics

Max. contact point capacity	2 VA (AC), 2 W (DC)
Operating voltage: AC, DC	100 V or less
Max. operating current	24 VAC, DC or less: 50 mA 48 VAC, DC or less: 40 mA 100 VAC, DC or less: 20 mA

* For detailed specifications of the IS10 series, refer to the IS10 series section on the SMC website: https://www.smc.eu

Dimensions

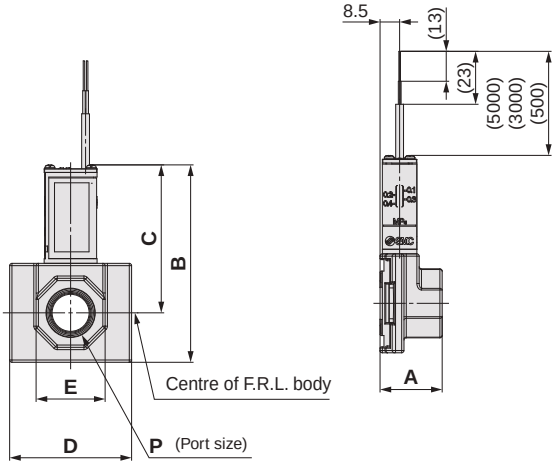

Model	P	A	B	C	D	E	F	Applicable AC size
IS10E-20-D	1/8, 1/4, 3/8	24	77.8	60.3	42	24	8.5	**AC20-D**
IS10E-30-D	1/4, 3/8, 1/2	27	85.8	64.3	53	30		**AC30-D**
IS10E-40-D	1/4, 3/8, 1/2, 3/4	30	93.8	68.3	71	36		**AC40-D**
IS10E-50-D	3/4	31	96.8	69.8	71	36		**AC40-06-D**
	1					46		
IS10E-60-D	3/4, 1	39	106.8	74.8	90	46	9.5	**AC50-D, AC60-D**
	1 1/4, 1 1/2	42				63		

Caution on Mounting

Pipe threads are not provided on the face which connects with the other components. For use, a separate spacer (or spacer with bracket) is required.

Right Angle Adapter

· Allows for modular connection with the product rotated 90 degrees

E 310 T – D

Body size ● ● **Right angle adapter**

210
310
410

Standard Specifications

Fluid	Air
Ambient and fluid temperatures	–5 to 60 °C (No freezing)
Proof pressure	1.5 MPa
Max. operating pressure	1.0 MPa

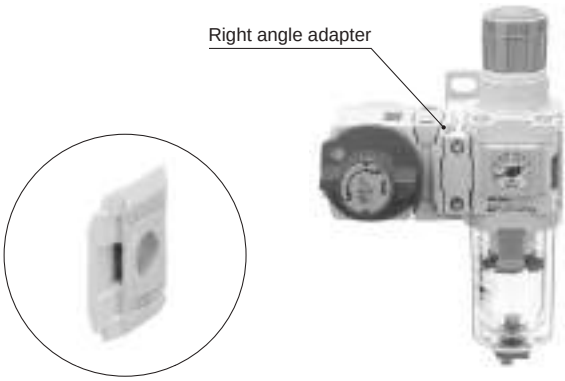

Dimensions

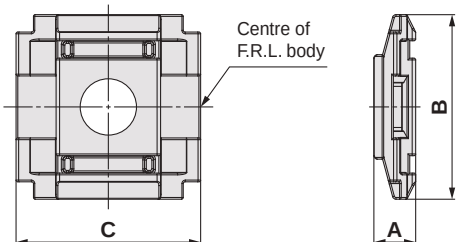

Model	A	B	C	Applicable AC size
E210T-D	9	42	42	**AC20-D**
E310T-D	12	53	53	**AC30-D**
E410T-D	15	71	71	**AC40-D**

Caution on Mounting

· Pipe threads are not provided on the face which connects with the other components. For use, a separate spacer (or spacer with bracket) is required.
· When mounting to a wall using a spacer with bracket, use a spacer on only one side.

Reducing Adapter

· Allows for modular connection with products 1 body size larger or smaller

E 310 R – D

● **Reducing adapter**

● **Body size**

310	For connecting sizes 20 and 30
410	For connecting sizes 30 and 40

Standard Specifications

Fluid	Air
Ambient and fluid temperatures	–5 to 60 °C (No freezing)
Proof pressure	1.5 MPa
Max. operating pressure	1.0 MPa

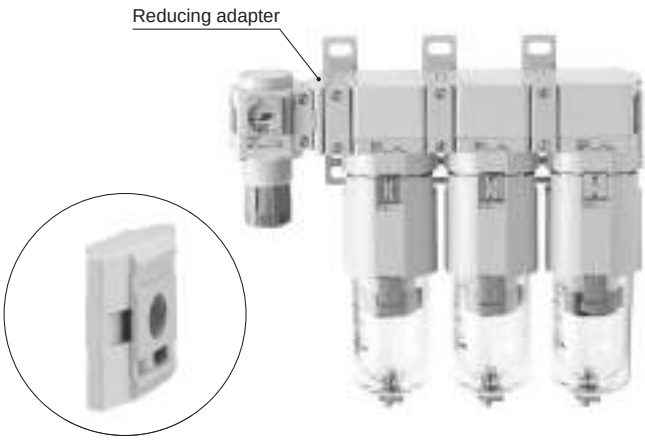

Dimensions

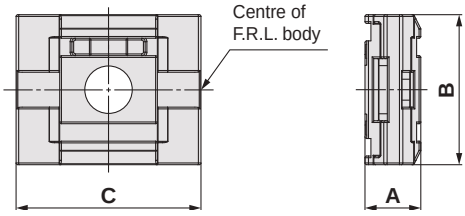

Model	A	B	C	Applicable AC size
E310R-D	16	43	53	**AC20-D, AC30-D**
E410R-D	20	51	71	**AC30-D, AC40-D**

Caution on Mounting

· Pipe threads are not provided on the face which connects with the other components. For use, a separate spacer (or spacer with bracket) is required.
· When mounting to a wall using a spacer with bracket, use a spacer on only one side.

Semi-standard Symbol Selection

· Select one each for **a** and **b**.
· When more than one specification is required, indicate in alphabetical order.
Example) Y34M-N03E-AZ-D

Cross Adapter: 1/4, 3/8, 1/2

· Allows for devices to be connected on the top, bottom, left, and right with a spacer

Y 34 M – ☐ 03 B – ☐ – D
① ② ③ ④ ⑤

			Symbol	Description	① Body size [Applicable AC size] 24 [AC20]	34 [AC30]	44 [AC40]
②	Pipe thread type		—	Rc	●	●	●
			N	NPT	●	●	●
			F	G	●	●	●
			+				
③	Port size		02	1/4	●	—	—
			03	3/8	—	●	—
			04	1/2	—	—	●
			+				
④	Option	Pressure gauge	B	Without pressure gauge (Double-sided blanking plate)	●	●	●
			E	Square embedded type pressure gauge (with limit indicator)	●	●	●
			+				
⑤	Semi-standard	a Top/bottom spacer mounting direction*1	—	Front to back mounting	●	●	●
			A	Left to right mounting	●	●	●
			+				
		b Unit	—	Pressure gauge in SI units: MPa	●	●	●
			Z*2	Pressure gauge: MPa/psi dual scale	○*3	○*3	○*3

*1 It is possible to change the mounting direction of the spacer (From front to back to left to right). For details on how to do so, refer to the operation manual.
*2 For the pipe thread type: NPT. This product is for overseas use only according to the New Measurement Act. (The SI unit type is provided for use in Japan.)
*3 ○: For the pipe thread type: NPT only

Top/bottom spacer mounting direction: Front to back mounting (—)

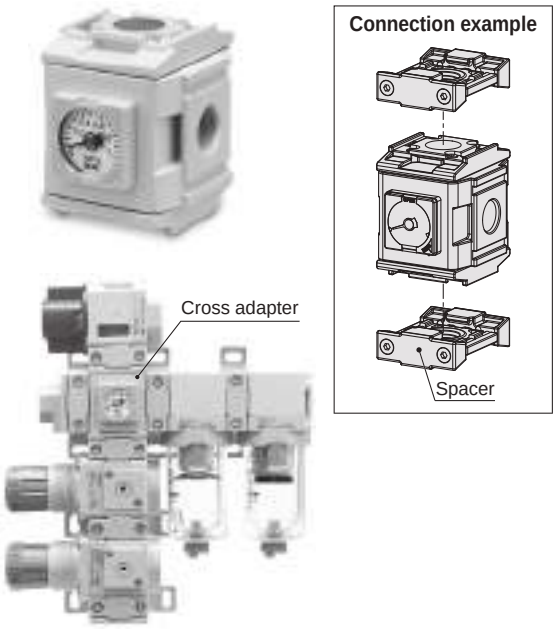

Top/bottom spacer mounting direction: Left to right mounting (A)

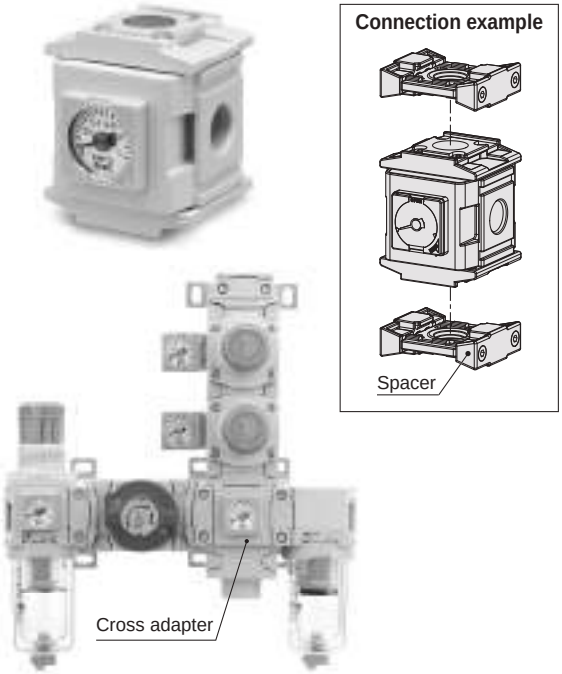

Standard Specifications

Fluid	Air
Ambient and fluid temperatures	-5 to 60 °C (No freezing)
Proof pressure	1.5 MPa
Max. operating pressure	1.0 MPa

Caution on Mounting

· Pipe threads are not provided on the face which connects with the other components. For use, a separate spacer (or spacer with bracket) is required.
· The backflow of oil may occur when a spacer is used on the inlet side of the lubricator. Attach a check valve between the lubricator and the product to prevent backflow.

Dimensions

Top/bottom spacer mounting direction:
Front to back mounting

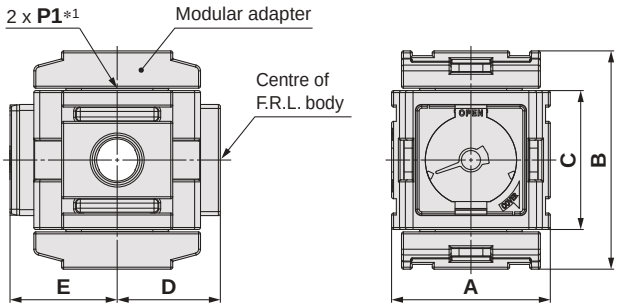

Top/bottom spacer mounting direction:
Left to right mounting

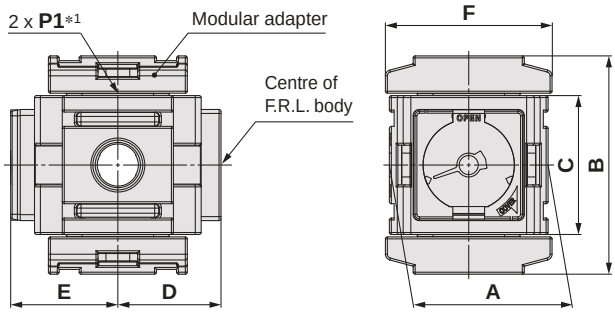

Model	Standard specifications					Optional specifications		Semi-standard specifications	Applicable AC size
						Without pressure gauge	Square embedded type pressure gauge	Spacer Left to right mounting	
	P1*1	A	B	C	D	E	E	F	
Y24M-D	1/4	40	55	35	26	26	27	42	AC20-D
Y34M-D	3/8	53	63	43	31.5	31.5	32.5	53	AC30-D
Y44M-D	1/2	70	77	51	40.5	40.5	41.5	71	AC40-D

*1 By removing the modular adapter, the female threads on the top and bottom surfaces can be used as piping ports for air release.

End Plate

· For blocking the unused piping ports on sides without a modular connection

E 300 E – D

- **End plate**
- **Body size**

200
300
400

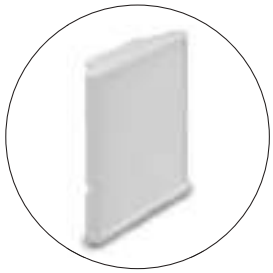

Standard Specifications

Fluid	Air
Ambient and fluid temperatures	–5 to 60 °C (No freezing)
Proof pressure	1.5 MPa
Max. operating pressure	1.0 MPa

Dimensions

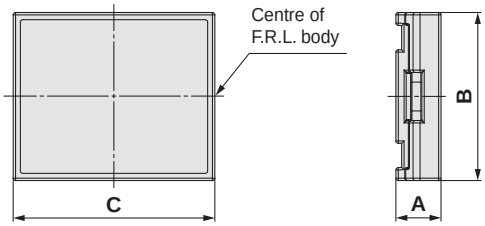

Model	A	B	C	Applicable AC size
E200E-D	9.4	35	42	**AC20-D**
E300E-D	9.4	43	53	**AC30-D**
E400E-D	12.4	51	71	**AC40-D**

Caution on Mounting

· Pipe threads are not provided on the face which connects with the other components. For use, a separate spacer (or spacer with bracket) is required.

AC-D Series
Specific Product Precautions

Be sure to read this before handling the products. Refer to the back cover for safety instructions. For F.R.L. units precautions, refer to the "Handling Precautions for SMC Products" and the "Operation Manual" on the SMC website: https://www.smc.eu

Air Supply

⚠ Caution

1. Use an air filter with 5 μm or less filtration rating on the inlet side of the valve to avoid any damage to the seat caused by dust when mounting a pressure relief 3-port valve on the inlet side.

Mounting / Adjustment

⚠ Caution

1. When the bowl is installed on the air filter, filter regulator, lubricator, mist separator, or micro mist separator (AC30-D to AC60-D), install them so that the lock button lines up to the groove of the front (or the back) of the body to avoid drop or damage of the bowl.

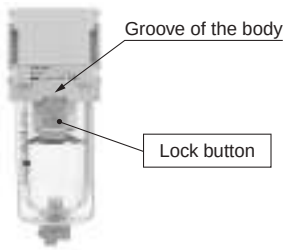

2. Tighten the 2 holding screws on the spacer with bracket or spacer evenly.
Tighten them to the recommended tightening torque.
Insufficient tightening torque may result in loosening or sealing failure. Excessive tightening torque may damage the thread, etc.

Recommended Torque Unit: N·m

Applicable model	AC20□	AC30□	AC40□	AC40□-06	AC50□ AC60□
Spacer with bracket part no.	Y200T-D	Y300T-D	Y400T-D	Y500T-D	Y600T-D
Spacer part no.	Y200-D	Y300-D	Y400-D	Y500-D	Y600-D
Torque	0.36 ±0.036	1.2 ±0.05	1.2 ±0.05	1.4 ±0.05	2.0 ±0.1

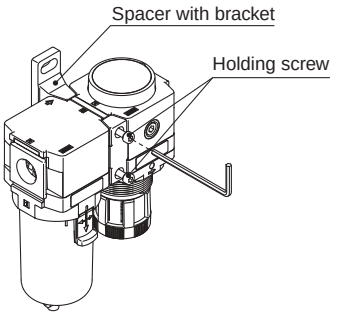

Selection

⚠ Warning

1. Piping load and moment
Avoid any torsional or bending moments other than those caused by the equipment's own weight as failure to do so may result in damage.
Support external piping separately. If moment application is unavoidable during operation, the moment should be lower than the max. moment shown below.
Piping materials without flexibility, such as steel tube piping, are prone to being affected by excess moment loads or vibrations from the piping side. Use flexible tubing in between to avoid such effects.

Unit: N·m

Applicable model	AC20□	AC30□	AC40□	AC40□-06	AC50□ AC60□
Max. moment (**M**)	14.5	16	19.5	35	45

Max. moment (**M**) = Length (**L**) x Load (**F**)

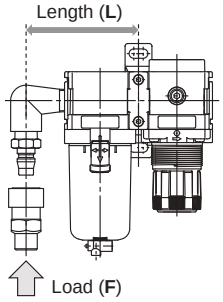

2. Float type auto drain
Operate under the following conditions to avoid a malfunction.
<N.O. type>
- Operating compressor: 0.75 kW (100 l/min (ANR)) or more
  When using 2 or more auto drains, multiply the value above by the number of auto drains to find the capacity of the compressors you will need.
  For example, when using 2 auto drains, 1.5 kW (200 l/min (ANR)) of the compressor capacity is required.
- Operating pressure: 0.1 MPa or more

<N.C. type>
- Operating pressure for AD27-D: 0.1 MPa or more
  Operating pressure for AD37-D/AD47-D: 0.15 MPa or more

3. Use a regulator or filter regulator with backflow function when mounting a pressure relief 3-port valve on the inlet side to ensure the release of the residual pressure. Otherwise, residual pressure will not be fully released.

⚠ Caution

1. When releasing air at the intermediate position using a T-spacer on the inlet side of the lubricator, lubricant may backflow. Therefore, releasing air that does not contain traces of lubricant is not possible. To release air that does not contain traces of lubricant, use a check valve (AKM series) on the inlet side of the lubricator to prevent a backflow of the lubricant.

2. If a pressure relief 3-port valve is mounted on the inlet side of the lubricator, causing a backflow of air, it can result in a backflow of oil or damage to internal parts. Do not use it in this manner.

3. An F.R.L. unit shipped from the plant has its model number labeled. However, components that are combined together during the distribution process do not have a label on them.

4. When operating at an inlet pressure lower than the inlet pressure used in the flow rate characteristics graph, the pressure drop on the outlet side may be greater. Therefore, be sure to conduct testing using the actual equipment.
For air combination selection, refer to the "Product Selection Guide."

Modular Type
Air Filter
AF Series

Air Filter AF Series	Model	Port size	Filtration [μm]	Options
	**AF20-D**	1/8, 1/4	5	Bracket Float type auto drain
	AF30-D	1/4, 3/8		
	AF40-D	1/4, 3/8, 1/2		
	AF40-06-D	3/4		
	AF50-D	3/4, 1		
p. 74 to 83	**AF60-D**	1		

Air Filter
AF20-D to AF60-D

Symbol

Air Filter

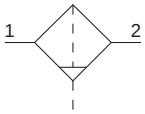

Air Filter with Auto Drain

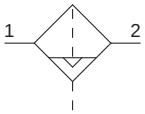

AF30-D

How to Order

AF 30 – ☐ 03 BD – ☐ –D

① ② ③ ④ ⑤

Option and Semi-standard Symbol Selection

- Select one each for **a** to **g**.
- When more than one specification is required, indicate in alphanumeric order.

Example) AF30-F03BD-2LR-D

			Symbol	Description	① Body size 20	30	40	50	60
②	Pipe thread type		—	Rc	●	●	●	●	●
			N	NPT	●	●	●	●	●
			F	G	●	●	●	●	●
			+						
③	Port size		**01**	1/8	●	—	—	—	—
			02	1/4	●	●	●	—	—
			03	3/8	—	●	●	—	—
			04	1/2	—	—	●	—	—
			06	3/4	—	—	●	●	—
			10	1	—	—	—	●	●
			+						
④	Option	**a** Mounting	—	Without mounting option	●	●	●	●	●
			B∗1	With bracket	●	●	●	●	●
			+						
		b Float type auto drain∗2	—	Without auto drain	●	●	●	●	●
			C∗3	N.C. (Normally closed) Drain port is closed when pressure is not applied.	●	●	●	●	●
			D∗4	N.O. (Normally open) Drain port is open when pressure is not applied.	—	●	●	●	●
			+						
⑤	Semi-standard	**c** Bowl∗5	—	Polycarbonate bowl	●	●	●	●	●
			2	Metal bowl	●	●	●	●	●
			6	Nylon bowl	●	●	●	●	●
			8	Metal bowl with level gauge	—	●	●	●	●
			C	With bowl guard	●	—∗6	—∗6	—∗6	—∗6
			6C	With bowl guard (Nylon bowl)	●	—∗7	—∗7	—∗7	—∗7
			+						
		d Indicator	—	Without indicator	●	●	●	●	●
			L	With element service indicator∗14	●	●	●∗12	●	●
			+						
		e Drain port∗8	—	With drain cock	●	●	●	●	●
			J∗9	Drain guide 1/8	●	—	—	—	—
				Drain guide 1/4	—	●	●	●	●
			W∗10	Drain cock with barb fitting	—	●	●	●	●
			+						
		f Flow direction	—	Flow direction: Left to right	●	●	●	●	●
			R	Flow direction: Right to left	●	●	●	●	●
			+						
		g Unit	—	Unit on product label: MPa, °C	●	●	●	●	●
			Z∗11	Unit on product label: psi, °F	○∗13	○∗13	○∗13	○∗13	○∗13

∗1 Option B is included in the package with the product but does not come assembled. The assembly consists of 2 types of the bracket and 2 mounting screws.
∗2 The auto drain port is Ø 10 One-touch fitting (② Pipe thread type: Rc, G) or Ø 3/8" One-touch fitting (② Pipe thread type: NPT)
∗3 When pressure is not applied, condensate which does not start the auto drain mechanism will be left in the bowl. Releasing the residual condensate before ending operations for the day is recommended.
∗4 If the compressor is small (0.75 kW, discharge flow is less than 100 l/min (ANR)), air leakage from the drain cock may occur during the start of operations. N.C. type is recommended.
∗5 Refer to chemical data on page 83 for chemical resistance of the bowl.
∗6 A bowl guard is provided as standard equipment (polycarbonate).
∗7 A bowl guard is provided as standard equipment (nylon).
∗8 The combination of float type auto drain C and D is not available.
∗9 Without a valve function. The mounting screws are the same as the thread of ②.
∗10 The combination of metal bowl 2 and 8 is not available.
∗11 For the pipe thread type: NPT. This product is for overseas use only according to the New Measurement Act. (The SI unit type is provided for use in Japan.)
∗12 Excludes port size "06"
∗13 ○: For the pipe thread type: NPT only
∗14 A special body type is required to mount the element service indicator. It cannot be mounted on a standard body.

AF20-D to AF60-D Series

Standard Specifications

Model		AF20-D	AF30-D	AF40-D	AF40-06-D	AF50-D	AF60-D
Port size		1/8, 1/4	1/4, 3/8	1/4, 3/8, 1/2	3/4	3/4, 1	1
Fluid		Air					
Ambient and fluid temperatures		–5 to 60 °C (No freezing)					
Proof pressure		1.5 MPa					
Max. operating pressure		1.0 MPa					
Auto drain minimum operating pressure	**N.C.**	0.1 MPa	0.15 MPa				
	N.O.	—	0.1 MPa				
Nominal filtration rating∗1		5 μm					
Compressed air purity class∗2		ISO 8573-1:2010 [6 : 8 : 4]∗3					
Drain capacity		8 cm^3	25 cm^3	45 cm^3			
Bowl material		Polycarbonate					
Bowl guard		Semi-standard (Steel)	Standard (Polycarbonate)				
Weight		0.09 kg	0.17 kg	0.35 kg	0.39 kg	0.85 kg	0.92 kg

∗1 For the following conditions in accordance with [Test condition: ISO 8573-4:2001 compliant, Test method ISO 12500-3:2009 compliant]
Conditions: When a new element is used, and the flow capacity, inlet pressure, and the amount of solid bodies on the filter inlet side are stable
∗2 The compressed air purity class is indicated based on ISO 8573-1:2010 Compressed air – Part 1: Contaminants and purity classes.
For details on this standard, refer to page 131.
∗3 The compressed air quality class on the inlet side is [7 : 9 : 4].

Bowl Assembly/Part Nos.

Bowl material	Drain discharge mechanism	Drain port	Other	Model					
				AF20-D	**AF30-D**	**AF40-D**	**AF40-06-D**	**AF50-D**	**AF60-D**
Polycarbonate	Manual	With drain cock	—	C2SF-D	—	—			
			With bowl guard	C2SF-C-D	C3SF-D	C4SF-D			
		Drain cock with barb fitting	With bowl guard	—	C3SF-W-D	C4SF-W-D			
		With drain guide (without valve function)	—	C2SF□-J-D	—	—			
			With bowl guard	C2SF□-CJ-D	C3SF□-J-D	C4SF□-J-D			
	Automatic∗1 (Auto drain)	Normally closed (N.C.)	—	AD27-D	—	—			
			With bowl guard	AD27-C-D	AD37□-D	AD47□-D			
		Normally open (N.O.)	With bowl guard	—	AD38□-D	AD48□-D			
Nylon	Manual	With drain cock	—	C2SF-6-A	—	—			
			With bowl guard	C2SF-6C-A	C3SF-6-A	C4SF-6-A			
		Drain cock with barb fitting	With bowl guard	—	C3SF-6W-A	C4SF-6W-A			
		With drain guide (without valve function)	—	C2SF□-6J-A	—	—			
			With bowl guard	C2SF□-6CJ-A	C3SF□-6J-A	C4SF□-6J-A			
	Automatic∗1 (Auto drain)	Normally closed (N.C.)	—	AD27-6-A	—	—			
			With bowl guard	AD27-6C-A	AD37□-6-A	AD47□-6-A			
		Normally open (N.O.)	With bowl guard	—	AD38□-6-A	AD48□-6-A			
Metal	Manual	With drain cock	—	C2SF-2-A	C3SF-2-A	C4SF-2-A			
			With level gauge	—	C3LF-8-A	C4LF-8-A			
		With drain guide (without valve function)	—	C2SF□-2J-A	C3SF□-2J-A	C4SF□-2J-A			
			With level gauge	—	C3LF□-8J-A	C4LF□-8J-A			
	Automatic∗1 (Auto drain)	Normally closed (N.C.)	—	AD27-2-A	AD37□-2-A	AD47□-2-A			
			With level gauge	—	AD37□-8-A	AD47□-8-A			
		Normally open (N.O.)	—	—	AD38□-2-A	AD48□-2-A			
			With level gauge	—	AD38□-8-A	AD48□-8-A			

∗1 The bowl assembly comes with a bowl seal.
□ in bowl assembly part numbers indicates a pipe thread type (applicable tubing for auto drain).
No indication is necessary for Rc thread; however, indicate N for NPT thread, and F for G thread. (For auto drain, —: Ø 10, N: Ø 3/8")
Please contact SMC separately for psi and °F unit display specifications.

Option/Part Nos.

Optional specifications	Model					
	AF20-D	**AF30-D**	**AF40-D**	**AF40-06-D**	**AF50-D**	**AF60-D**
Bracket assembly∗1	AF24P-070AS	AF34P-070AS	AF44P-070AS	AF49P-070AS	AF54P-070AS	
Auto drain	Refer to “Bowl Assembly/Part Nos.”					

∗1 The assembly consists of a bracket A/B and 2 mounting screws.

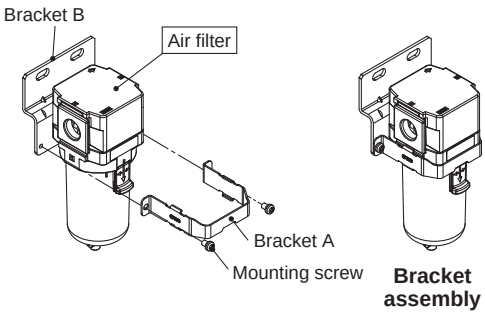

Replacement Parts

Description	Part no.					
	AF20-D	**AF30-D**	**AF40-D**	**AF40-06-D**	**AF50-D**	**AF60-D**
Filter element	AF20P-060S	AF30P-060S	AF40P-060S		AF50P-060S	AF60P-060S
Baffle	AF24P-040S	AF34P-040S	AF44P-040S		AF54P-040S	AF64P-040S
Bowl seal	C2SFP-260S	C32FP-260S	C42FP-260S			
Bowl assembly∗1, ∗2	Refer to “Bowl Assembly/Part Nos.”					

∗1 The bowl assembly comes with a bowl seal.
∗2 Please contact SMC separately for psi and °F unit display specifications.

Flow Rate Characteristics (Representative values)

AF20-D

Rc1/4

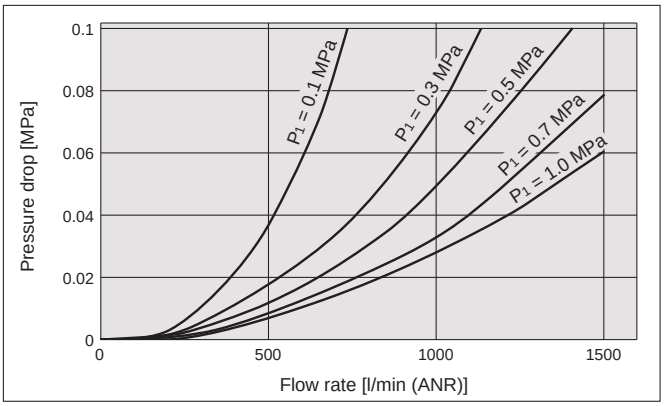

AF30-D

Rc3/8

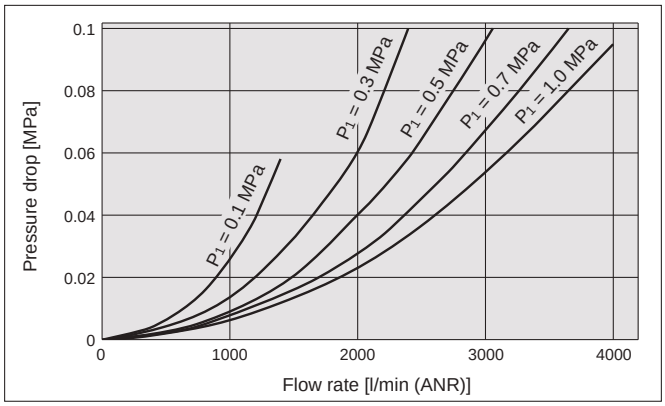

AF40-D

Rc1/2

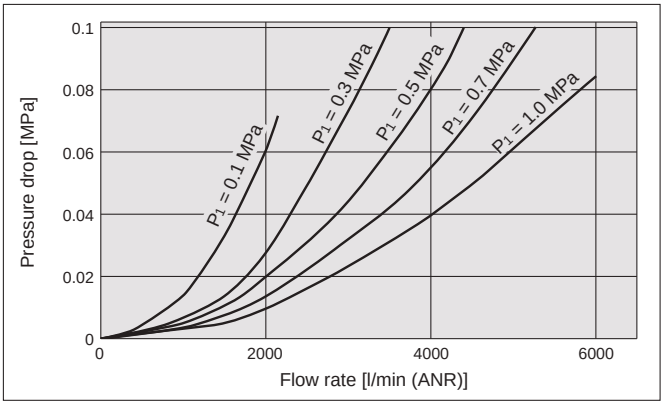

AF40-06-D

Rc3/4

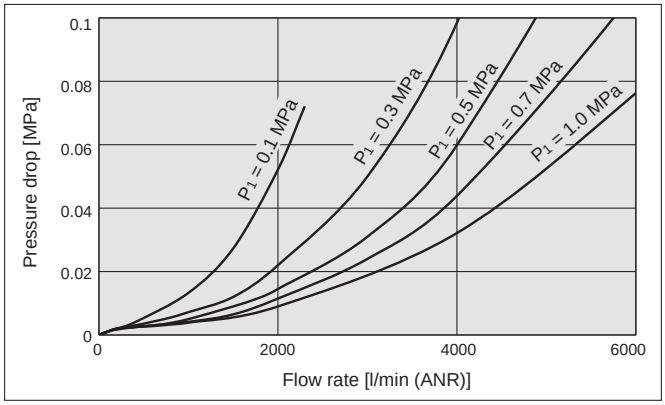

AF50-D

Rc1

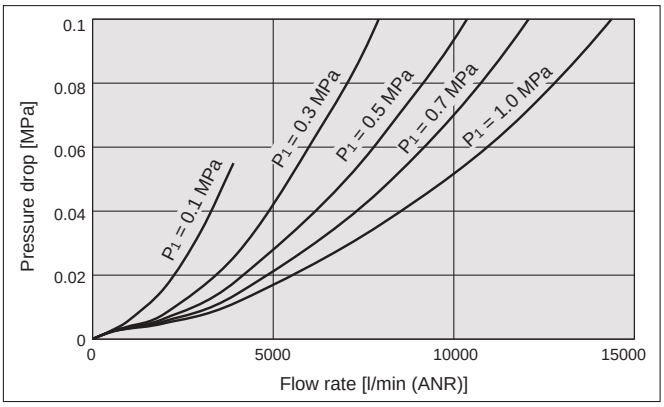

AF60-D

Rc1

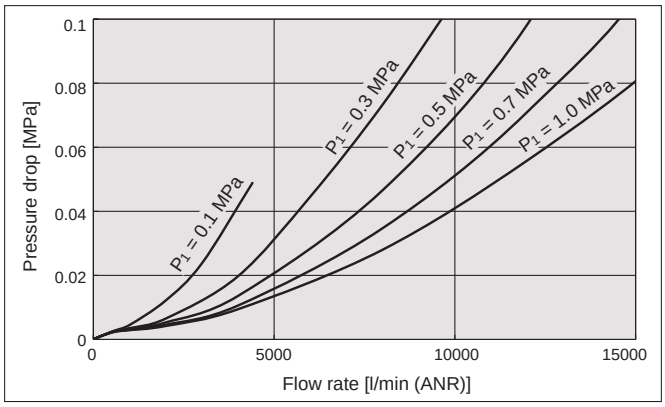

Working Principle: Float Type Auto Drain

N.O. type: AD38-D, AD48-D

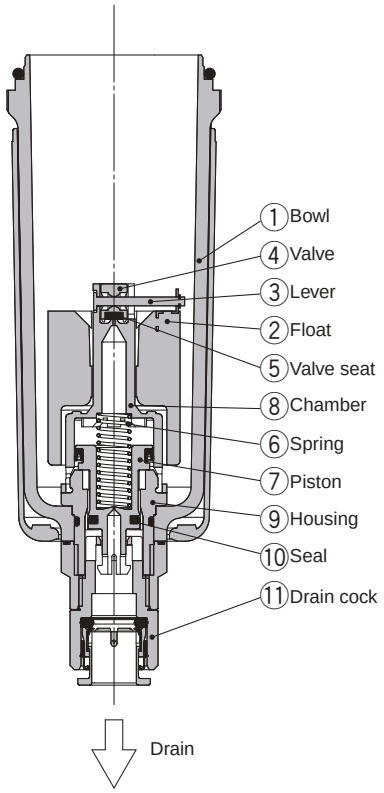

- **When pressure inside the bowl is released:**
  When pressure is released from the bowl ①, the piston ⑦ is lowered by the spring ⑥.
  The sealing action of the seal ⑩ is interrupted, and the outside air flows inside the bowl ① through the housing hole ⑨ and the drain cock ⑪.
  Therefore, if there is an accumulation of condensate in the bowl ①, it will drain out through the drain cock.
- **When pressure is applied inside the bowl:**
  When pressure is 0.1 MPa or more, the force of the piston ⑦ surpasses the force of the spring ⑥, and the piston goes up.
  This pushes seal ⑩ up so that it creates a seal, and the inside of the bowl ①, is shut off from the outside air.
  If there is no accumulation of condensate in the bowl ① at this time, the float ② will be pulled down by its own weight, causing the valve ④, which is connected to the lever ③, to seal the valve seat ⑤.
- **When there is an accumulation of condensate in the bowl:**
  The float ② rises due to its own buoyancy and the seal at the valve seat ⑤ is interrupted.
  This allows the pressure inside the bowl ① to enter the chamber ⑧. The result is that the combined pressure inside the chamber ⑧ and the force of the spring ⑥ lowers the piston ⑦.
  This causes the sealing action of the seal ⑩ to be interrupted, and the accumulated condensate in the bowl ① drains out through the drain cock ⑪.
  Turning the drain cock ⑪ manually counterclockwise lowers the piston ⑦, and causes the seal created by the seal ⑩ to be interrupted, thus allowing the condensate to drain out.

N.C. type: AD37-D, AD47-D

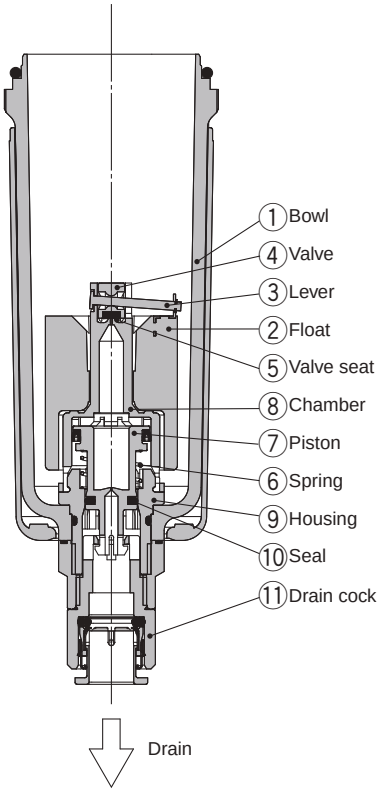

- **When pressure inside the bowl is released:**
  Even when pressure inside the bowl ① is released, spring ⑥ keeps the piston ⑦ in its upward position.
  This keeps the seal created by the seal ⑩ in place; thus, the inside of the bowl ① is shut off from the outside air.
  Therefore, even if there is an accumulation of condensate in the bowl ①, it will not drain out.
- **When pressure is applied inside the bowl:**
  Even when pressure is applied inside the bowl ①, the combined force of the spring ⑥ and the pressure inside the bowl ① keeps the piston ⑦ in its upward position.
  This maintains the seal created by the seal ⑩ in place; thus, the inside of the bowl ① is shut off from the outside air.
  If there is no accumulation of condensate in the bowl ① at this time, the float ② will be pulled down by its own weight, causing the valve ④, which is connected to the lever ③, to seal the valve seat ⑤.
- **When there is an accumulation of condensate in the bowl:**
  The float ② rises due to its own buoyancy and the seal at the valve seat ⑤ is interrupted. This allows the pressure inside the bowl ① to enter the chamber ⑧.
  The result is that the pressure inside the chamber ⑧ surpasses the force of the spring ⑥ and pushes the piston ⑦ downward.
  This causes the sealing action of the seal ⑩ to be interrupted and the accumulated condensate in the bowl ① drains out through the drain cock ⑪.
  Turning the drain cock ⑪ manually counterclockwise lowers the piston ⑦, and causes the seal created by the seal ⑩ to be interrupted, thus allowing the condensate to drain out.

Compact auto drain N.C. type: AD27-D

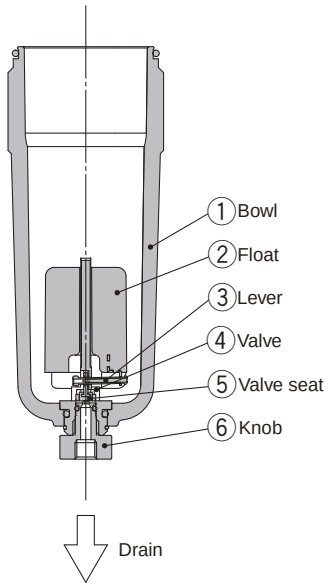

- **When pressure inside the bowl is released:**
  Even when pressure inside the bowl ① is released, the weight of the float ② causes the valve ④, which is connected to the lever ③, to seal the valve seat ⑤. As a result, the inside of the bowl ① is shut off from the outside air.
  Therefore, even if there is an accumulation of condensate in the bowl ①, it will not drain out.
- **When pressure is applied inside the bowl:**
  Even when pressure is applied inside the bowl ①, the weight of the float ② and the differential pressure that is applied to the valve ④ cause the valve ④ to seal the valve seat ⑤, and the outside air is shut off from the inside of the bowl ①.
- **When there is an accumulation of condensate in the bowl:**
  The float ② rises due to its own buoyancy and the seal at the valve seat ⑤ is interrupted.
  The condensate inside the bowl ① drains out through the knob ⑥.
  Turning the knob ⑥ manually counterclockwise lowers it and causes the sealing action of the valve seat ⑤ to be interrupted, which allows the condensate to drain out.

Operating State and Proper Use of Float Type Auto Drain

Auto drain	When pressure is not applied (After exhausting residual pressure)	When pressure is applied		Minimum operating pressure
		Before condensate accumulates	When condensate accumulates	
N.O. Normally open	Condensate discharged (Open) 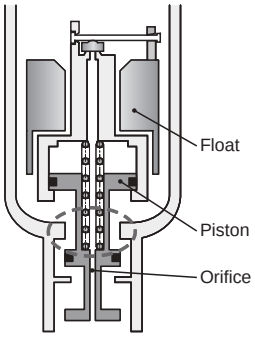	Condensate not discharged (Close) 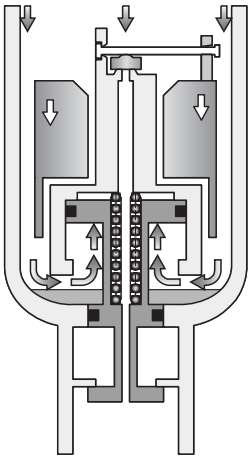	Condensate discharged (Open) 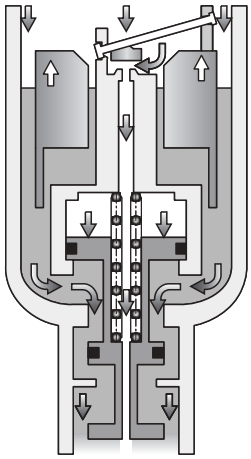	**0.1 MPa or more** AF30-D to AF60-D
N.C. Normally closed	Condensate not discharged (Close) 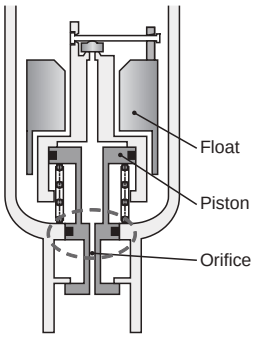			**0.1 MPa or more** AF20-D **0.15 MPa or more** AF30-D to AF60-D

◆ For both N.O. and N.C., the condensate can be discharged manually by turning the drain cock to the “O” position.

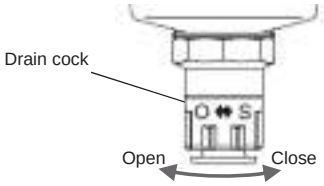

Proper Use				Recommended auto drain
Compressor	When pressure is not applied (After exhausting residual pressure)	Cold climates		
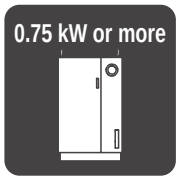	**Condensate not accumulated** Do not want to accumulate condensate generated at the inlet side when pressure is not applied.	**Want to prevent troubles caused by freezing.**	→	N.O.*1 Normally open
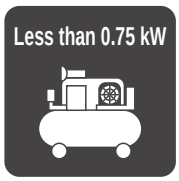	**Condensate accumulated**	—	→	N.C. Normally closed

*1 For N.O. (Normally open) type, the condensate discharge passage is open when pressure is not applied. For this reason, the drain port is not closed completely in a compressor with a small supply amount (less than 0.75 kW) and the air will ceaselessly blow out.

Dimensions

AF20-D

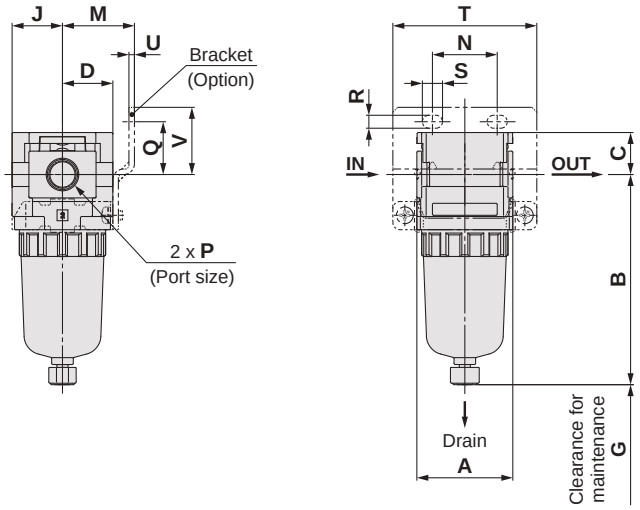

AF30-D to AF40-06-D

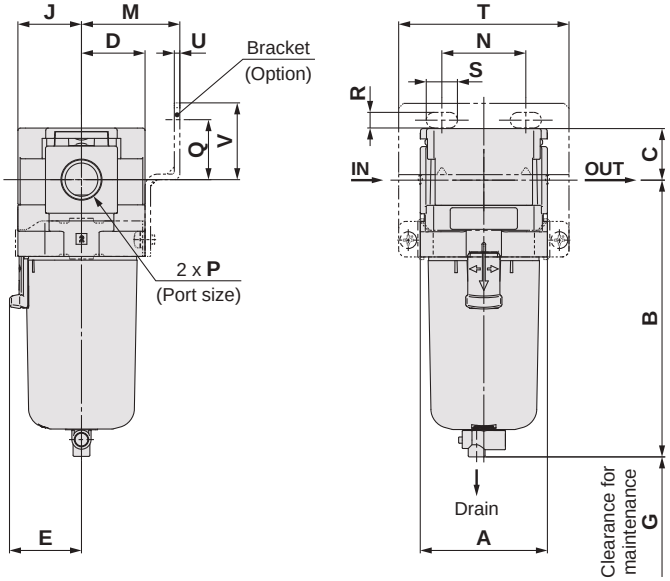

AF50-D to AF60-D